PRODUCT SPECIFICATION

R32 Monobloc

HM121M U33
HM141M U33
HM161M U33
HM123M U33
HM143M U33
HM163M U33

011-1W0244

EHPA for Austria, Switzerland and Germany

R1 Compressor™ Black Fin LG ThinQ

Features

- High energy efficiency (SCOP 4.45 / A+++)
- Excellent performance at low ambient temperature (100% @ -7°C)
- Wide operation range (ambient : -25 ~ 35°C / water side : 15 ~ 65°C)
- R32 refrigerant with low GWP
- R1 scroll compressor
- Black Fin heat exchanger
- LG ThinQ
- KEYMARK / EHPA[1] certification / MCS / Eurovent certification

1) Approved model by EHPA : HM123M U33, HM143M U33, HM163M U33.

Model Line-up

Category	Unit	Model Name		
		Capacity (kW)		
		12.0	14.0	16.0
1 Phase Model 220 ~ 240V, 1Ø, 50Hz	Monobloc Unit	HM121M U33	HM141M U33	HM161M U33
3 Phase Model 380 ~ 415V, 3Ø, 50Hz		HM123M U33	HM143M U33	HM163M U33

Seasonal Energy

Description			Unit	HM121M U33 HM123M U33	HM141M U33 HM143M U33	HM161M U33 HM163M U33
Space Heating (according to EN14825)	Average Climate Water Outlet 35°C	SCOP	W/W	4.45	4.45	4.45
		Seasonal Space Heating Efficiency (η_s)	%	175	175	175
		Seasonal Space Heating Eff. Class (A+++ to D scale)	-	A+++	A+++	A+++
	Average Climate Water Outlet 55°C	SCOP	-	3.18	3.18	3.18
		Seasonal Space Heating Efficiency (η_s)	%	124	124	124
		Seasonal Space Heating Eff. Class (A+++ to D scale)	-	A+	A+	A+

Nominal Capacity and Nominal Power Input

Description		OAT (DB)	LWT (DB)	Unit	HM121M U33 HM123M U33	HM141M U33 HM143M U33	HM161M U33 HM163M U33
Nominal Capacity	Heating	7°C	35°C	kW	12.00	14.00	16.00
		7°C	55°C		12.00	12.00	12.00
		2°C	35°C		11.00	12.00	13.80
	Cooling	35°C	18°C		12.00	14.00	16.00
		35°C	7°C		12.00	14.00	16.00
Nominal Power Input	Heating	7°C	35°C	kW	2.61	3.11	3.64
		7°C	55°C		4.29	4.29	4.29
		2°C	35°C		3.13	3.42	3.94
	Cooling	35°C	18°C		2.61	3.26	4.00
		35°C	7°C		4.44	5.38	6.40
COP	Heating	7°C	35°C	W/W	4.60	4.50	4.40
		7°C	55°C		2.80	2.80	2.80
		2°C	35°C		3.52	3.51	3.50
EER	Cooling	35°C	18°C	W/W	4.60	4.30	4.00
		35°C	7°C		2.70	2.60	2.50

Product Specification

Technical Specification				Unit	HM121M U33	HM141M U33	HM161M U33	HM123M U33	HM143M U33	HM163M U33
Water Side	Operation Range (leaving water temperature)	Heating	Min. ~ Max.	°CDB	15 ~ 65					
		Cooling			5 ~ 27 (16 ~ 27)[2]					
		DHW[1]			15 ~ 80					
	Piping Connections	Water Circuit	Inlet	mm (inch)	Male PT 25.4 (1)					
			Outlet	mm (inch)	Male PT 25.4 (1)					
	Rated Water Flow Rate at LWT 35°C			LPM	34.50	40.25	46.00	34.50	40.25	46.00
Refrigerant Side	Operation Range (outdoor temp.)	Heating	Min. ~ Max.	°CDB	-25 ~ 35					
		Cooling			5 ~ 48					
	Compressor	Quantity		EA	1					
		Type		-	Hermetic Sealed Scroll					
	Refrigerant	Type		-	R32					
		GWP (global warming potential)		-	675					
		Precharged Amount		g	2,400					
		t-CO_2 eq		-	1.620					
Sound Power Level		Heating	Rated	dB(A)	63					
Sound Pressure Level (at 1m)		Heating	Rated	dB(A)	52					
Dimensions		Unit	W x H x D	mm	1,239 x 1,380 x 330					
Weight		Unit		kg	124.5					
Power Supply		Voltage, Phase, Frequency		V, Ø, Hz	220 ~ 240, 1, 50			380 ~ 415, 3, 50		
		Rated Running Current	Heating	A	11.6	13.8	16.1	3.8	4.6	5.4
			Cooling	A	11.6	14.4	17.7	3.8	4.8	5.9
		Recommended Circuit Breaker		A	40			16		
Wiring Connections		Power Supply Cable (included earth, H07RN-F)		mm^2 x cores	6.0 x 3C			4.0 x 5C		

1) DHW 58 ~ 80°C operating is available only when the booster heater is operating.
2) When fan coil unit not used.

Note
1. Due to our policy of innovation some specifications may be changed without notification.
2. Wiring cable size must comply with the applicable local and national codes. And "Electric characteristics" chapter should be considered for electrical work and design. Especially the power cable and circuit breaker should be selected in accordance with that.
3. Sound pressure level is measured on the rated condition in the anechoic rooms by ISO 3745 standard.
   Sound power level is measured on the rated condition in the reverberation rooms by ISO 9614 standard.
   Therefore, these values can be increased owing to ambient conditions during operation.
4. Performances are accordance with EN14511 and reflect ErP testing conditions. Above gives the declared values at rated conditions acc. ErP regulation.
   For max. capacities, refer to performance data.
   • Rated running current : outdoor temp. 7°CDB / 6°CWB, LWT 35°C
5. This product contains fluorinated greenhouse gases.

PRODUCT SPECIFICATION

Performance Table for Heating Operaion

Maximum Heating Capacity (Including Defrost Effect)

HM121M U33 / HM123M U33

Outdoor Temperature	LWT 30°C	LWT 35°C	LWT 40°C	LWT 45°C	LWT 50°C	LWT 55°C	LWT 60°C	LWT 65°C
	TC	TC	TC	TC	TC	TC	TC	TC
-25°C DB	8.75	8.50	8.25	8.00	-	-	-	-
-20°C DB	10.13	10.00	9.88	9.75	9.63	-	-	-
-15°C DB	11.50	11.50	11.50	11.50	11.50	11.50	-	-
-7°C DB	12.00	12.00	12.00	12.00	12.00	12.00	12.00	-
-4°C DB	12.00	12.00	12.00	12.00	12.00	12.00	12.00	12.00
-2°C DB	12.00	12.00	12.00	12.00	12.00	12.00	12.00	12.00
2°C DB	12.00	12.00	12.00	12.00	12.00	12.00	12.00	12.00
7°C DB	12.00	12.00	12.00	12.00	12.00	12.00	12.00	12.00
10°C DB	12.00	12.00	12.00	12.00	12.00	12.00	12.00	12.00
15°C DB	12.00	12.00	12.00	12.00	12.00	12.00	12.00	12.00
18°C DB	12.00	12.00	12.00	12.00	12.00	12.00	12.00	12.00
20°C DB	12.00	12.00	12.00	12.00	12.00	12.00	12.00	12.00
35°C DB	12.00	12.00	12.00	12.00	12.00	12.00	12.00	12.00

HM141M U33 / HM143 U33

Outdoor Temperature	LWT 30°C	LWT 35°C	LWT 40°C	LWT 45°C	LWT 50°C	LWT 55°C	LWT 60°C	LWT 65°C
	TC	TC	TC	TC	TC	TC	TC	TC
-25°C DB	9.25	9.00	8.75	8.50	-	-	-	-
-20°C DB	10.63	10.50	10.38	10.25	10.13	-	-	-
-15°C DB	12.00	12.00	12.00	12.00	12.00	12.00	-	-
-7°C DB	14.00	14.00	14.00	14.00	14.00	14.00	14.00	-
-4°C DB	14.00	14.00	14.00	14.00	14.00	14.00	14.00	14.00
-2°C DB	14.00	14.00	14.00	14.00	14.00	14.00	14.00	14.00
2°C DB	14.00	14.00	14.00	14.00	14.00	14.00	14.00	14.00
7°C DB	14.00	14.00	14.00	14.00	14.00	14.00	14.00	14.00
10°C DB	14.00	14.00	14.00	14.00	14.00	14.00	14.00	14.00
15°C DB	14.00	14.00	14.00	14.00	14.00	14.00	14.00	14.00
18°C DB	14.00	14.00	14.00	14.00	14.00	14.00	14.00	14.00
20°C DB	14.00	14.00	14.00	14.00	14.00	14.00	14.00	14.00
35°C DB	14.00	14.00	14.00	14.00	14.00	14.00	14.00	14.00

HM161M U33 / HM163 U33

Outdoor Temperature	LWT 30°C	LWT 35°C	LWT 40°C	LWT 45°C	LWT 50°C	LWT 55°C	LWT 60°C	LWT 65°C
	TC	TC	TC	TC	TC	TC	TC	TC
-25°C DB	10.50	10.00	9.50	9.00	-	-	-	-
-20°C DB	12.30	11.75	11.44	11.13	10.75	-	-	-
-15°C DB	14.10	13.50	13.38	13.25	13.13	13.00	-	-
-7°C DB	16.00	16.00	16.00	16.00	16.00	16.00	16.00	-
-4°C DB	16.00	16.00	16.00	16.00	16.00	16.00	16.00	16.00
-2°C DB	16.00	16.00	16.00	16.00	16.00	16.00	16.00	16.00
2°C DB	16.00	16.00	16.00	16.00	16.00	16.00	16.00	16.00
7°C DB	16.00	16.00	16.00	16.00	16.00	16.00	16.00	16.00
10°C DB	16.00	16.00	16.00	16.00	16.00	16.00	16.00	16.00
15°C DB	16.00	16.00	16.00	16.00	16.00	16.00	16.00	16.00
18°C DB	16.00	16.00	16.00	16.00	16.00	16.00	16.00	16.00
20°C DB	16.00	16.00	16.00	16.00	16.00	16.00	16.00	16.00
35°C DB	16.00	16.00	16.00	16.00	16.00	16.00	16.00	16.00

Note
1. DB : Dry Bulb Temperature (°C), LWT : Leaving Water Temperature (°C), LPM : Liters Per Minute (ℓ/min), TC : Total Capacity (kW)
2. Direct interpolation is permissible. Do not extrapolate.
3. Measuring procedure follows EN-14511.
   • Rated values are based on standard conditions and it can be found on specifications.
   • Above table values may not be matched according to installation condition. Except for rated value, the performance is not guaranteed.
   • In accordance with the test standard (or nations), the rating will vary slightly.
4. The shaded areas are not guaranteed continuous operation.

Performance Table for Cooling Operation

Maximum Cooling Capacity

HM121M U33 / HM123M U33

Outdoor Temperature	LWT 7°C	LWT 10°C	LWT 13°C	LWT 15°C	LWT 18°C	LWT 20°C	LWT 22°C
	TC	TC	TC	TC	TC	TC	TC
10°C DB	11.25	12.33	13.40	14.12	15.20	15.91	16.63
20°C DB	11.55	12.20	12.84	13.27	13.92	14.35	14.78
30°C DB	11.85	12.07	12.28	12.42	12.64	12.78	12.93
35°C DB	12.00	12.00	12.00	12.00	12.00	12.00	12.00
40°C DB	12.15	12.00	11.85	11.75	11.59	11.49	11.39
45°C DB	12.30	12.00	11.69	11.49	11.19	10.99	10.78

HM141M U33 / HM143 U33

Outdoor Temperature	LWT 7°C	LWT 10°C	LWT 13°C	LWT 15°C	LWT 18°C	LWT 20°C	LWT 22°C
	TC	TC	TC	TC	TC	TC	TC
10°C DB	13.13	14.38	15.64	16.47	17.73	18.57	19.40
20°C DB	13.48	14.23	14.98	15.48	16.24	16.74	17.24
30°C DB	13.83	14.08	14.33	14.49	14.75	14.91	15.08
35°C DB	14.00	14.00	14.00	14.00	14.00	14.00	14.00
40°C DB	14.18	14.00	13.82	13.70	13.53	13.41	13.29
45°C DB	14.35	14.00	13.64	13.41	13.05	12.82	12.58

HM161M U33 / HM163 U33

Outdoor Temperature	LWT 7°C	LWT 10°C	LWT 13°C	LWT 15°C	LWT 18°C	LWT 20°C	LWT 22°C
	TC	TC	TC	TC	TC	TC	TC
10°C DB	15.00	16.43	17.87	18.83	20.26	21.22	22.17
20°C DB	15.40	16.26	17.12	17.70	18.56	19.13	19.70
30°C DB	15.80	16.09	16.37	16.57	16.85	17.04	17.23
35°C DB	16.00	16.00	16.00	16.00	16.00	16.00	16.00
40°C DB	16.20	16.00	15.80	15.66	15.46	15.32	15.19
45°C DB	16.40	16.00	15.59	15.32	14.92	14.65	14.38

Note
1. DB : Dry Bulb Temperature (°C), LWT : Leaving Water Temperature (°C), LPM : Liters Per Minute (ℓ/min), TC : Total Capacity (kW)
2. Direct interpolation is permissible. Do not extrapolate.
3. Measuring procedure follows EN-14511.
   • Rated values are based on standard conditions and it can be found on specifications.
   • Above table values may not be matched according to installation condition. Except for rated value, the performance is not guaranteed.
   • In accordance with the test standard (or nations), the rating will vary slightly.

PRODUCT SPECIFICATION

Drawings

Category	Unit	Model Name		
		Capacity (kW)		
		12.0	14.0	16.0
1 Phase Model 220 ~ 240V, 1Ø, 50Hz	Monobloc Unit	HM121M U33	HM141M U33	HM161M U33
3 Phase Model 380 ~ 415V, 3Ø, 50Hz		HM123M U33	HM143M U33	HM163M U33

HM121M U33 / HM141M U33 / HM161M U33
HM123M U33 / HM143M U33 / HM163M U33

[Unit : mm]

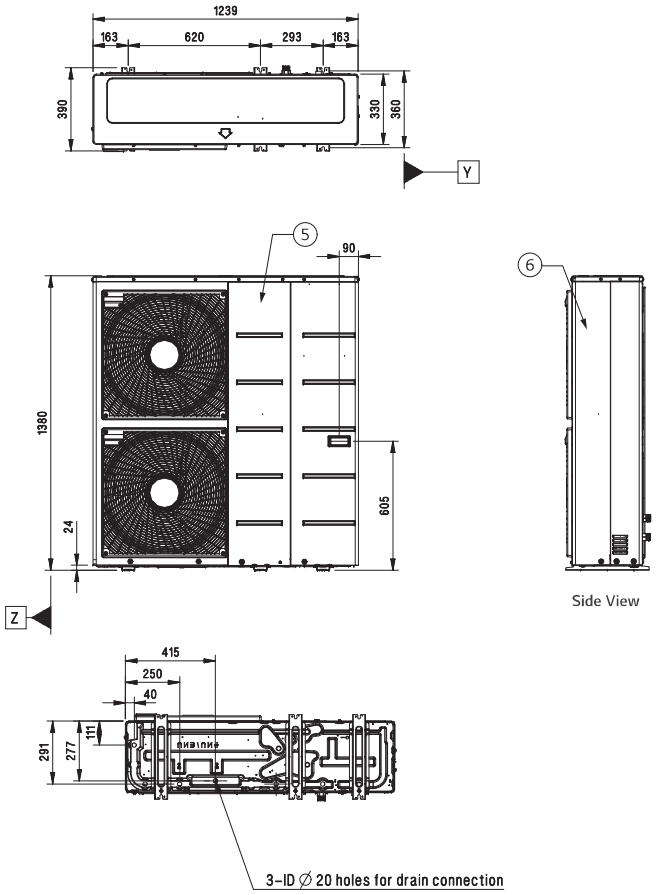

[Unit : mm]

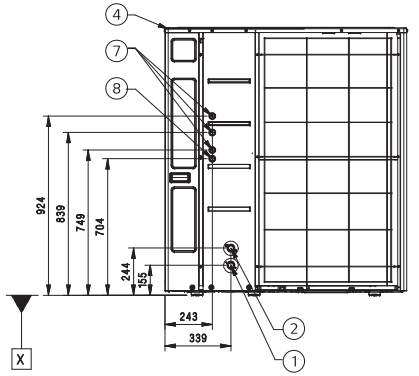

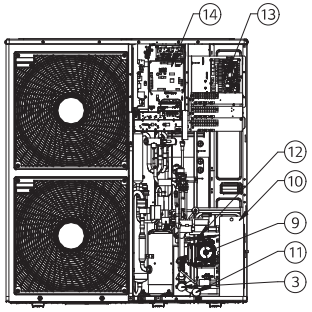

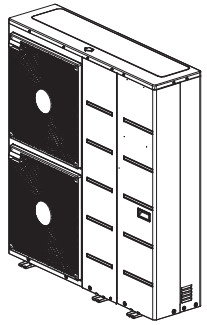

3D View

No.	Part Name	Description
1	Entering Water Pipe	Male PT 1 inch
2	Leaving Water Pipe	Male PT 1 inch
3	Strainer	Filtering and stacking particles inside circulating water
4	Top Cover	-
5	Front Panel	-
6	Side Panel	-
7	Low Voltage	Accessory kit cables
8	UNIT Power	Outdoor entry power cable
9	Water Pump	-
10	Plate Heat Exchanger	Heat exchange between refrigerant and water
11	Pressure Gauge	Indicates circulating water pressure
12	Safety Valve	Open at water pressure 3bar
13	Indoor Control Box	Indoor PCB and terminal blocks
14	Outdoor Control Box	Outdoor PCB and terminal blocks