BAXI

Innovative Heating & Cooling Systems

Residential Range

General Catalogue

October 2020

Company Profile

BAXI S.p.A. has a proud tradition of developing and producing boilers and heating systems to the highest technological standards. For 40 years BAXI S.p.A. has provided a wide range of cutting-edge solutions, anticipating market evolutions and paying attention to customer needs.

How to read this catalogue

In this catalogue we show the complete range of BAXI products. On each page, in addition to the product benefits, there is a detailed list of the appliance characteristics, a technical chart, and coloured icons. These icons refer to the specific pages of the catalogue where, by segment, the technical drawings and all the specific accessories are represented.

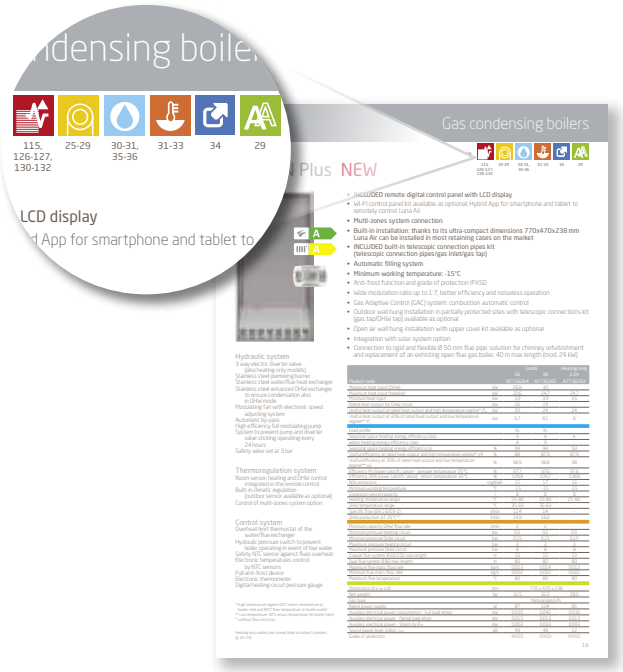

In the technical sections you will find:


Technical section


Flue pipe accessories


Hydraulic accessories


Thermoregulation accessories


Outdoor accessories


Other accessories

Index

Digital

Baxi Mago
The chronothermostat that simplifies your life

BAXI MAGO
think simple!

Download on the App Store
GET IT ON Google Play
Works with IFTTT
JUST ASK alexa

Baxi Mago is the modulating chronothermostat with integrated wi-fi, designed to simplify the life of installers and end users. It allows to **control your home comfort (boiler, heat pump) via mobile application** thanks to the wi-fi connection*, wherever you are.

The App can be donwloaded from your smartphone or tablet and it is possible to connect one or more households to control the heating, manage the schedule, display consumptions, display boiler fault diagnosis, set holiday mode, etc.

An innovative tool with a unique design, combining extreme ease of use and modern design.

OPENTHERM ON/OFF
R-BUS
BSB

Aesthetically pleasing and easy to use!

Thanks to the knob and to the back-lighted display, the temperature can be easily adjusted. The display screen is easy to read.
Presence detection allows the unit to light up when you approach it. The intuitive menu has a top button to select and confirm the current operation and a bottom rewind button to return to the Home screen.

Quick Auto Programming

Quick Auto Programming automatically creates a schedule based on your habits after answering few questions.

* If the option is available in your country.

Multiple smartphones or tablets control option

Pairing the device allows the heating control, wherever you are. Multiple smartphones or tablets control option is available, so each member of the family can interact with the chronothermostat.

It follows your schedule!

Schedule your central heating to turn on when you need it, setting two different weekly schedules. It is also possible to create five different scenarios related to multiple temperature requirements ("day", "night", "evening", "out of home", etc.).

Consumptions under control

It provides a guide to show how much energy your heating system is using, with weekly, monthly or annual consumptions graphs.

It helps you saving money!

Baxi Mago allows you saving money on your energy bills: thanks to the control from smartphone or tablet, it is possible to reduce the temperature while you are away, with saving on consumptions. Furthermore, it modulates the power of the boiler with less consumptions both on heating and DHW production.

Baxi Mago

- Chronothermostat with integrated wi-fi module
- To connect Baxi Mago to the domestic internet, it is not necessary to connect other devices to the router
- Remote control APP for smartphones and tablets only
- It is possible to connect one or more households for temperature control, weekly plan management, holiday mode selection, display consumptions, display boiler fault diagnosis, etc.
- Multiple device management: it is possible for more than one person to interact with the chronothermostat
- Quick Auto Programming automatically creates a schedule based on your habits after answering few questions

BAXI MAGO
think simple!

Model		Code
	Chronothermostat Baxi Mago with integrated wi-fi module + adapter kit GTW17 (BSB) For: Luna Platinum+, Nuvola Platinum+, Power 32. Compatibility is granted only with models produced starting from January 2018 with serial number starting from 180000000. Check baxi.it for compatibility.	BSB A7724375
	Chronothermostat Baxi Mago with integrated wi-fi module + adapter kit GTW16 (OpenTherm and ON/OFF) For: Luna Duo-tec E, Duo-tec Compact E, Nuvola Duo-tec+, Duo-tec Compact GA, Luna3 Blue+: compatibility is granted only with models produced starting from January 2018 with serial number starting from 180000000. Luna3 Blue+: only ON/OFF connection is available on boiler TA. Check baxi.it for compatible features.	OPENTHERM ON/OFF 7652303
	Chronothermostat Baxi Mago with integrated wi-fi module (R-BUS) For: Prime, PBS-i WH2 and PBS-i FS2 heat pumps. Check baxi.it for compatible features.	R-BUS 7701201

Technical drawings/graphs

BAXI MAGO

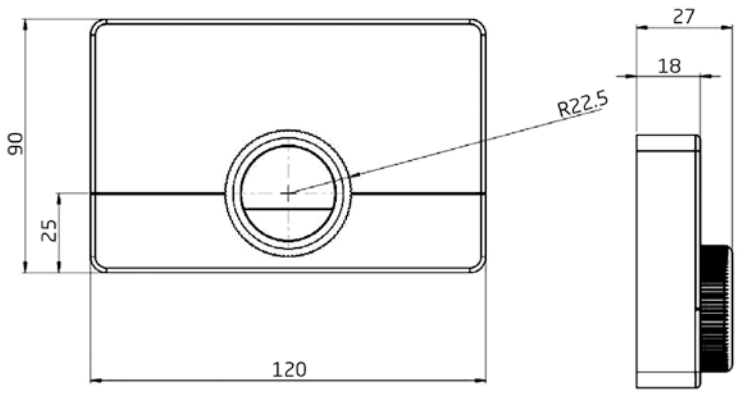

The dimensions of Baxi Mago have been designed in order to cover the electric Box 503

ADAPTER KIT (GATEWAY)

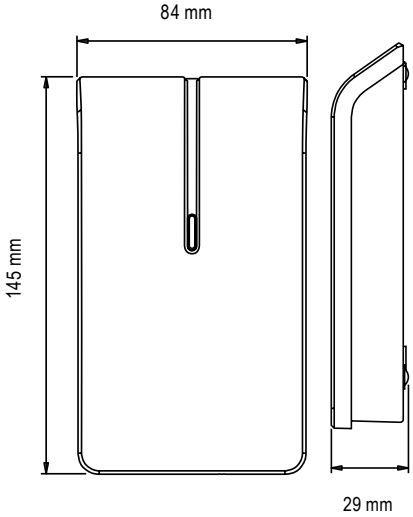

Installation schemes

Baxi Mago + GTW17 (BSB)

1) Adapter kit connection (BSB*)
2) Adapter kit (GTW17) with 24V transformer
3) Baxi Mago connection (R-Bus; 2 wires, possibly shielded cables)
4) Domestic wi-fi connection to the Router
5) Connection with App Baxi Mago

* to locate BSB terminal in the boiler, see boiler techincal guide

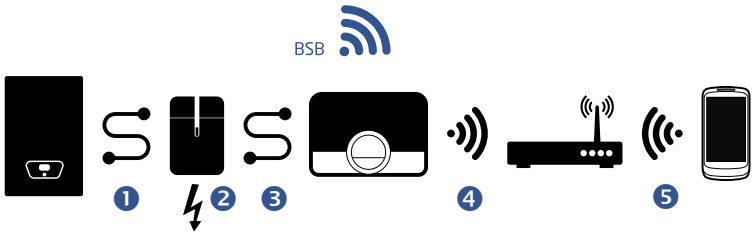

Baxi Mago + GTW16 (Modulating OpenTherm or On/Off)

1) Adapter kit connection (OpenTherm or On/Off *)
2) Adapter kit (GTW16) with 24V transformer
3) Baxi Mago connection (R-Bus; 2 wires, possibly shielded cables)
4) Domestic wi-fi connection to the Router
5) Connection with App Baxi Mago

* to locate OpenTherm terminal in the boiler, see boiler techincal guide

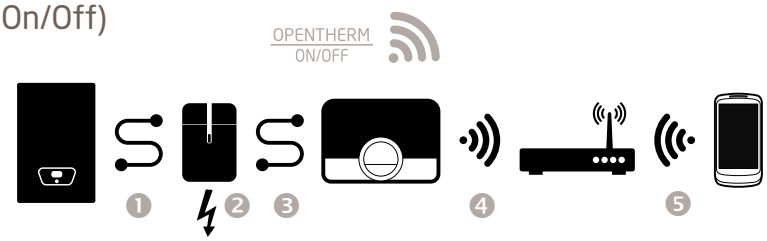

Baxi Mago

1) Baxi Mago connection (R-Bus; 2 wires, possibly shielded cables)
2) Domestic wi-fi connection to the Router
3) Connection with App Baxi Mago

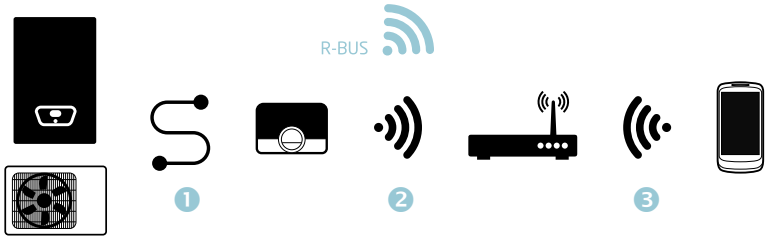

Technical data

Dimensions	
Width x height x depth (Baxi Mago)	120 x 90 x 27 mm
Width x height x depth (Gateway) - only for Baxi Mago with OpenTherm or ON/OFF protocol	84 x 145 x 29 mm
Electrical power supply	
Bus connection voltage	24 V ± 5%
Maximum electrical consumption	1,5 W
Electrical connection	
Maximum cable length for dedicated Baxi Mago bus	50 m
Maximum cable resistance	2 x 5 ohm
Ambient conditions	
Operating conditions	from 0 °C to 60 °C
Temperature	
Measurable room temperature range	from 5 °C to 60 °C
Maximum temperature deviation at 20°C	0,3 °C
Maximum room control overshoot after pre-heating	1 °C
Temperature variation	+/- 0,5 °C
Temperature control range	from 10 °C to 30 °C

Packages

Baxi Mago + GTW17 for products with BSB protocol

1) Baxi Mago package:

- Baxi Mago
- Screw and plug fixings
- Mounting bracket for wall hung installation
- User guide

2) Gateway package:

- Adapter kit or Gateway (GTW)
- Power supply 230 V
- L type adapter for "italian" plug (CEI 23-50)
- G type adapter for "english" plug (BS 1363)
- Screw and plug fixings
- Installation guide

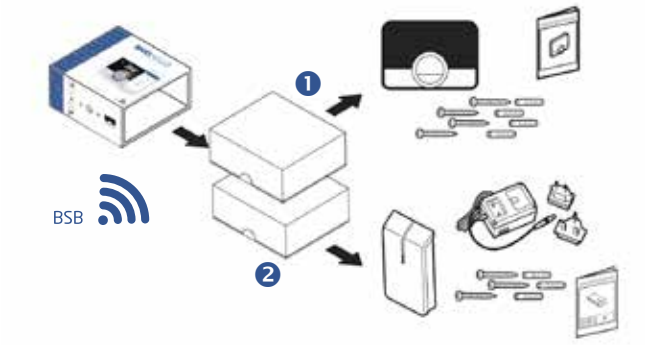

Baxi Mago + GTW16 for products with OpenTherm protocol

1) Baxi Mago package:

- Baxi Mago
- Screw and plug fixings
- Mounting bracket for wall hung installation
- User guide

2) Gateway package:

- Adapter kit or Gateway (GTW)
- L type adapter for "italian" plug (CEI 23-50)
- G type adapter for "english" plug (BS 1363)
- Screw and plug fixings
- Installation guide

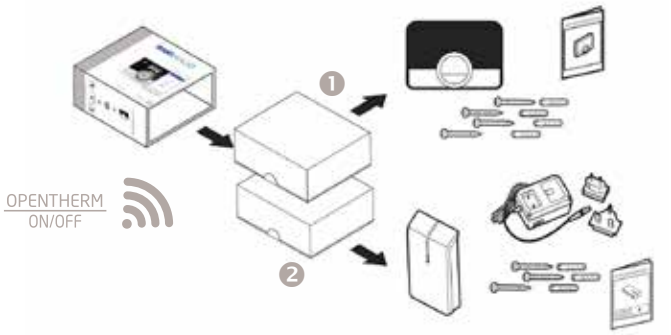

Baxi Mago for products with R-BUS protocol

1) Baxi Mago package:

- Baxi Mago
- Screw and plug fixings
- Mounting bracket for wall hung installation
- User guide

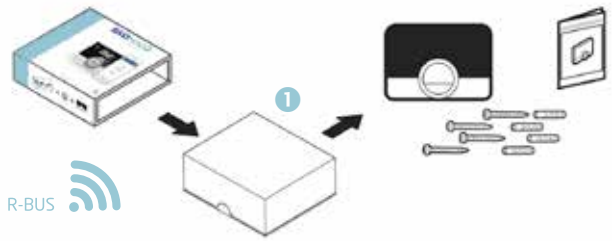

Baxi Air Connect: Smart Comfort

The **Air Connect App** and the wi-fi module allow the **remote control of Baxi Luna Clima air conditioners.**

Air Connect is the application to have the full control of the temperature and the comfort of the house or of the office at any moment and from everywhere.

Once the wi-fi module is installed (see the installation manual for instruction) and **Air Connect App is downloaded,** it is possible to control the air conditioners from smartphones and tablet (iOs and Android system).

It is possible to:
turn on/off the air conditioner, choose the operating mode, set the fan speed, set the flip horizontal and vertical swing (where it is possible), display all active functions, set a timer, etc.

Air Connect means easy and intuitive comfort control:

- Direct and easy connection to Baxi air conditioner via smartphone and tablet.
- **No visual impact:** the wi-fi module is installed in the dedicated location behind the frontal panel of the air conditioner (wall hung models).
- **Easy scheduling of the timetable** that combines comfort and significant energy savings.
- **More indoor units can be controlled with the same application** (Multi split models), as long as a wi-fi module is installed in each unit.
- **Same functions as the remote control directly from your device,** for example: Turbo, Sleep, iClean, etc.

Model		Code
	Air Connect wi-fi for Baxi Astra	A7746546

Download on the App Store

GET IT ON Google Play

Wi-fi module package contents
The packaging includes: USB Plug&Play stick, start guide and warranty certificate.

Terms of service
The application can be used with more Baxi indoor units, as long as a wi-fi module is installed in every unit.

BAXI

Gas condensing boilers

BAXI

Technical pages

110, 125, 129-130	25-29	30-31, 35-36	31-33	29, 34

Luna Platinum+

- Wide modulation ratio up to 1:10 (1:6 mod. 1.12 GA) better efficiency and noiseless operation
- Gas Adaptive Control (GAC) system: combustion automatic control to maintain constantly the highest level of efficiency
- Removable control panel for wall-hung installation with wide text display, regulation knob, menu selection buttons and back-lighting; supplied with the boiler
- Remote control Baxi Mago available as optional
- Built-in solar control ▲
- High efficiency full modulating pump
- Complete soundproofing of the generator
- Frontal access for advanced diagnostics
- Ø50 mm flue pipe mod. 24 kW, 40 m max length

		Combi		Heating only			
		24 GA	33 GA	1.12 GA	1.18 GA	1.24 GA	1.32 GA
Product code		7219692	7219693	7219688	7219689	7219690	7219691
Maximum heat input (DHW)	kW	24,7	34	-	-	-	-
Maximum heat input (heating)	kW	16,5	24,7	12,4	17,4	24,7	33
Minimum heat input	kW	2,5	3,4	2,1	2,1	2,5	3,3
Rated heat output for DHW circuit	kW	24	33	-	-	-	-
Useful heat output at rated heat output and high temperature regime* P_4	kW	16	24	12	16,9	24	32
Useful heat output at 30% of rated heat output and low temperature regime** P_1	kW	5,4	8	4	5,7	8	10,7
Load profile		XL	XXL	-	-	-	-
Seasonal space heating energy efficiency class		A	A	A	A	A	A
Water heating energy efficiency class		A	A	-	-	-	-
Seasonal space heating energy efficiency ηs	%	93	93	93	93	93	93
Useful efficiency at rated heat output and high temperature regime* $\eta 4$	%	88,0	87,9	88,0	87,9	87,9	87,9
Useful efficiency at 30% of rated heat output and low temperature regime** $\eta 1$	%	98,1	98,1	98,2	98,1	98,1	98
Efficiency Pn (lower calorific value) - average temperature 70 °C	%	97,7	97,6	97,7	97,6	97,6	97,6
Efficiency 30% (lower calorific value) - return temperature 30 °C	%	108,9	108,9	109	108,9	108,9	108,8
NOx emissions	mg/kWh	18	26	23	27	22	28
Minimum working temperature	°C	-5	-5	-5	-5	-5	-5
Expansion vessel capacity	l	8	10	8	8	8	10
Heating temperature range	°C	25-80	25-80	25-80	25-80	25-80	25-80
DHW temperature range	°C	35-60	35-60	-	-	-	-
Specific flow (EN 13203-1)	l/min	11,5	15,8	-	-	-	-
DHW production ΔT 25°C (1)	l/min	13,8	18,9	-	-	-	-
Minimum capacity DHW flow rate	l/min	2	2	-	-	-	-
Minimum pressure heating circuit	bar	0,5	0,5	0,5	0,5	0,5	0,5
Minimum pressure DHW circuit	bar	0,15	0,15	-	-	-	-
Maximum pressure heating circuit	bar	3	3	3	3	3	3
Maximum pressure DHW circuit	bar	8	8	-	-	-	-
Coaxial flue system Ø 60/100 max length	m	10	10	10	10	10	10
Dual flue system Ø 80 max length	m	80	80	80	80	80	80
Maximum flue mass flow rate	kg/s	0,011	0,016	0,006	0,008	0,011	0,015
Minimum flue mass flow rate	kg/s	0,001	0,002	0,001	0,001	0,001	0,002
Maximum flue temperature	°C	80	80	80	80	80	80
Dimensions (h x w x d)	mm	763 x 450 x 345					
Net weight	kg	38,5	39,5	34,5	34,5	34,5	37,5
Gas type		Natural gas/LPG					
Rated power supply	W	91	105	64	83	91	103
Auxiliary electrical power consumption - Full load *elmax*	kW	0,025	0,035	0,025	0,040	0,050	0,060
Auxiliary electrical power - Partial load *elmin*	kW	0,012	0,012	0,012	0,012	0,012	0,012
Auxiliary electrical power - Stand-by P_{SB}	kW	0,004	0,004	0,004	0,004	0,004	0,004
Sound power level, indoor L_{WA}	dB	50	53	50	57	57	57
Grade of protection		IPX5D	IPX5D	IPX5D	IPX5D	IPX5D	IPX5D

Hydraulic system

3 way electric diverter valve (also heating only models)
Stainless steel premixing burner
Stainless steel water/flue heat exchanger
Stainless steel enhanced DHW exchanger to ensure condensation also in DHW mode (combi models)
Modulating fan with electronic speed adjusting system
Automatic by-pass
High efficiency full modulating pump of the heating circuit with built-in air vent
System to prevent pump and diverter valve sticking operating every 24 hours
Heating circuit relief valve set at 3 bar

Thermoregulation system

Built-in climatic regulation (outdoor sensor available as optional)
Control of multi-zones system option
Cascade installation option
Room sensor, heating circuit and sanitary timers included in the control panel

Control system

Overheat limit thermostat of the water/flue exchanger
Hydraulic pressure switch to prevent boiler operating in event of low water
Safety NTC sensor against flues overheat
Electronic temperatures control by NTC sensors
Full anti-frost device
Electronic thermometer
Digital heating circuit pressure gauge

▲ in case of contemporary control of a solar system and a zone by the wall-mounted control panel, it is necessary to install a programmable clip in/external module THINK.

* High temperature regime: 60°C return temperature at heater inlet and 80°C flow temperature at heater outlet
** Low temperature: 30°C return temperature (at heater inlet)
(1) without flow restrictor

Heating only models are connectable to indirect cylinders (p. 22-23)

Technical pages

110, 125, 129-130	25-29	30-31, 35-36	31-33	34	29, 34

Luna Duo-tec E

- New modern and elegant design
- Wide modulation ratio up to 1:7 (1:6 mod. 1.12 GA) better efficiency and noiseless operation
- Gas Adaptive Control (GAC) system: combustion automatic control to maintain constantly the highest level of efficiency
- High efficiency full modulating circulating pump
- Digital control panel with back-lighted LCD display
- Remote control Baxi Mago available as optional
- Integration with solar system option
- Complete soundproofing of the generator
- Frontal access for advanced diagnostics
- Ø50 mm flue pipe mod. 24 kW, 40 m max length

NEW

		Combi				Heating only			
		24 GA	28 GA	33 GA	40 GA	1.12 GA	1.24 GA	1.28 GA	1.32 GA
Product code		A7720025	A7720026	A7720027	A7720028	A7720022	A7720023	A7720024	A7741416
Maximum heat input (DHW)	kW	24,7	28,9	34	41,2	-	-	-	-
Maximum heat input (heating)	kW	20,6	24,7	28,9	33	12,4	24,7	28,9	33
Minimum heat input	kW	3,5	3,9	4,8	5,9	2,1	3,5	4,1	4,7
Rated heat output for DHW circuit	kW	24	28	33	40	-	-	-	-
Useful heat output at rated heat output and high temperature regime* P_4	kW	20	24	28	32	12	24	28	32
Useful heat output at 30% of rated heat output and low temperature regime** P_1	kW	6,7	8	9,4	10,7	4	8	9,4	10,7
Load profile		XL	XL	XXL	XXL	-	-	-	-
Seasonal space heating energy efficiency class		A	A	A	A	A	A	A	A
Water heating energy efficiency class		A	A	A	A	-	-	-	-
Seasonal space heating energy efficiency ηs	%	93	93	93	93	93	93	93	93
Useful efficiency at rated heat output and high temperature regime* $\eta 4$	%	88	87,9	88,1	87,9	88,1	87,9	87,9	87,9
Useful efficiency at 30% of rated heat output and low temperature regime** $\eta 1$	%	98	98	98,1	98	98,2	98	98	98
Efficiency Pn (lower calorific value) - average temperature 70 °C	%	97,7	97,6	97,8	97,6	97,8	97,6	97,6	97,6
Efficiency 30% (lower calorific value) - return temperature 30 °C	%	108,8	108,8	108,9	108,8	109	108,8	108,8	108,8
NOx emissions	mg/kWh	15	17	15	24	21	16	16	28
Minimum working temperature	°C	-5	-5	-5	-5	-5	-5	-5	-5
Expansion vessel capacity	l	8	8	10	10	8	8	10	10
Heating temperature range	°C	25-80	25-80	25-80	25-80	25-80	25-80	25-80	25-80
DHW temperature range	°C	35-60	35-60	35-60	35-60	-	-	-	-
Specific flow (EN 13203-1)	l/min	11,5	13,4	15,8	19,1	-	-	-	-
DHW production ΔT 25°C [1]	l/min	13,8	16,1	18,9	22,9	-	-	-	-
Minimum capacity DHW flow rate	l/min	2	2	2	2	-	-	-	-
Minimum pressure heating circuit	bar	0,5	0,5	0,5	0,5	0,5	0,5	0,5	0,5
Minimum pressure DHW circuit	bar	0,15	0,15	0,15	0,15	-	-	-	-
Maximum pressure heating circuit	bar	3	3	3	3	3	3	3	3
Maximum pressure DHW circuit	bar	8	8	8	8	-	-	-	-
Coaxial flue system Ø 60/100 max length	m	10	10	10	10	10	10	10	10
Dual flue system Ø 80 max length	m	80	80	80	80	80	80	80	80
Maximum flue mass flow rate	kg/s	0,012	0,014	0,016	0,019	0,006	0,012	0,014	0,016
Minimum flue mass flow rate	kg/s	0,002	0,002	0,002	0,003	0,001	0,002	0,002	0,002
Maximum flue temperature	°C	80	80	80	80	75	80	80	80
Dimensions (h x w x d)	mm	763 x 450 x 345							
Net weight	kg	38,5	38,5	39,5	41	34,5	34,5	36	37,5
Gas type		Natural gas/LPG							
Rated power supply	W	85	99	106	120	72	85	99	91
Auxiliary electrical power consumption - Full load *elmax*	kW	0,030	0,042	0,041	0,035	0,030	0,042	0,047	0,035
Auxiliary electrical power - Partial load *elmin*	kW	0,013	0,013	0,013	0,013	0,013	0,013	0,013	0,013
Auxiliary electrical power - Stand-by P_{SB}	kW	0,003	0,003	0,003	0,003	0,003	0,003	0,003	0,003
Sound power level, indoor L_{WA}	dB	49	50	53	51	52	52	53	52
Grade of protection		IPX5D	IPX5D	IPX5D	IPX5D	IPX5D	IPX5D	IPX5D	IPX5D

Hydraulic system
3 way electric diverter valve (also heating only models)
Stainless steel premixing burner
Stainless steel water/flue heat exchanger
Stainless steel enhanced DHW exchanger to ensure condensation also in DHW mode (Combi models)
Modulating fan with electronic speed adjusting system
Automatic by-pass
High efficiency full modulating pump of the heating circuit with built-in air vent
System to prevent pump and diverter valve sticking operating every 24 hours
Heating circuit relief valve set at 3 bar

Thermoregulation system
Built-in climatic regulation (outdoor sensor available as optional)
Control of multi-zones system option

Control system
Overheat limit thermostat of the water/flue exchanger
Hydraulic pressure switch to prevent boiler operating in event of low water
Safety NTC sensor against flues overheat
Electronic temperatures control by NTC sensors
Full anti-frost device
Electronic thermometer
Digital heating circuit pressure gauge

* High temperature regime: 60°C return temperature at heater inlet and 80°C flow temperature at heater outlet
** Low temperature: 30°C return temperature (at heater inlet)
[1] without flow restrictor

Heating only models are connectable to indirect cylinders (p. 22-23)

Technical pages

111, 125-126, 129-130	25-29	30-31, 35-36	31-33	34	29, 34

Duo-tec Compact E

- New modern and elegant design
- Wide modulation ratio up to 1:7 better efficiency and noiseless operation
- Gas Adaptive Control (GAC) system: combustion automatic control to maintain constantly the highest level of efficiency
- High efficiency full modulating circulating pump
- Remote control Baxi Mago available as optional
- Digital control panel with back-lighted wide LCD display
- Compact dimensions (700x400x299 mm)
- Integration with solar system option
- Ø50 mm flue pipe mod. 24 kW, 40 m max length
- Upper cover available as optional that allows the outdoor installation (in partially protected locations) of the boiler

Hydraulic system

3 way electric diverter valve (also heating only models)
Stainless steel premixing burner
Stainless steel water/flue heat exchanger
Stainless steel DHW exchanger
Modulating fan with electronic speed adjusting system
Automatic by-pass
High efficiency full modulating pump of the heating circuit with built-in air vent
System to prevent pump and diverter valve sticking operating every 24 hours
Heating circuit relief valve set at 3 bar

Thermoregulation system

Built-in climatic regulation (outdoor sensor available as optional)
Control of multi-zones system option

Control system

Overheat limit thermostat of the water/flue exchanger
Hydraulic pressure switch to prevent boiler operating in event of low water
Safety NTC sensor against flues overheat
Electronic temperatures control by NTC sensors
Full anti-frost device
Electronic thermometer
Heating circuit pressure gauge

		Combi			Heating only
Product code		20 GA A7722081	24 GA A7722082	28 GA A7722083	1.24 GA A7722080
Maximum heat input (DHW)	kW	19,9	24,7	28,9	-
Maximum heat input (heating)	kW	19,9	20,6	24,7	24,7
Minimum heat input	kW	3,5	3,5	3,9	3,5
Rated heat output for DHW circuit	kW	19,4	24	28	-
Useful heat output at rated heat output and high temperature regime* P_4	kW	19,4	20	24	24
Useful heat output at 30% of rated heat output and low temperature regime** P_1	kW	6,5	6,7	8	8
Load profile		XL	XL	XL	-
Seasonal space heating energy efficiency class		A	A	A	A
Water heating energy efficiency class		A	A	A	-
Seasonal space heating energy efficiency ηs	%	93	93	93	93
Useful efficiency at rated heat output and high temperature regime* $\eta 4$	%	88	88	87,9	87,9
Useful efficiency at 30% of rated heat output and low temperature regime** $\eta 1$	%	98	98	98	98
Efficiency Pn (lower calorific value) - average temperature 70 °C	%	97,7	97,7	97,6	97,6
Efficiency 30% (lower calorific value) - return temperature 30 °C	%	108,8	108,8	108,8	108,8
NOx emissions	mg/kWh	15	15	17	16
Minimum working temperature	°C	-5	-5	-5	-5
Expansion vessel capacity	l	7	7	7	7
Heating temperature range	°C	25-80	25-80	25-80	25-80
DHW temperature range	°C	35-60	35-60	35-60	-
Specific flow (EN 13203-1)	l/min	9,5	11,5	13,4	-
DHW production ΔT 25°C [1]	l/min	11,4	13,8	16,1	-
Minimum capacity DHW flow rate	l/min	2	2	2	-
Minimum pressure heating circuit	bar	0,5	0,5	0,5	0,5
Minimum pressure DHW circuit	bar	0,15	0,15	0,15	-
Maximum pressure heating circuit	bar	3	3	3	3
Maximum pressure DHW circuit	bar	8	8	8	-
Coaxial flue system Ø 60/100 max length	m	10	10	10	10
Dual flue system Ø 80 max length	m	80	80	80	80
Maximum flue mass flow rate	kg/s	0,009	0,012	0,014	0,012
Minimum flue mass flow rate	kg/s	0,002	0,002	0,002	0,002
Maximum flue temperature	°C	80	80	80	80
Dimensions (h x w x d)	mm	700 x 400 x 299			
Net weight	kg	34	34	34	30
Gas type		Natural gas/LPG			
Rated power supply	W	73	85	99	85
Auxiliary electrical power consumption - Full load *elmax*	kW	0,030	0,030	0,042	0,042
Auxiliary electrical power - Partial load *elmin*	kW	0,013	0,013	0,013	0,013
Auxiliary electrical power - Stand-by P_{SB}	kW	0,003	0,003	0,003	0,003
Sound power level, indoor L_{WA}	dB	49	49	48	52
Grade of protection		IPX5D	IPX5D	IPX5D	IPX5D

* High temperature regime: 60°C return temperature at heater inlet and 80°C flow temperature at heater outlet
** Low temperature: 30°C return temperature (at heater inlet)
[1] without flow restrictor

Heating only models are connectable to indirect cylinders (p. 22-23)

Technical pages

111, 125, 129-130	25-29	30-31, 35-36	31-33	34	29, 34

Prime

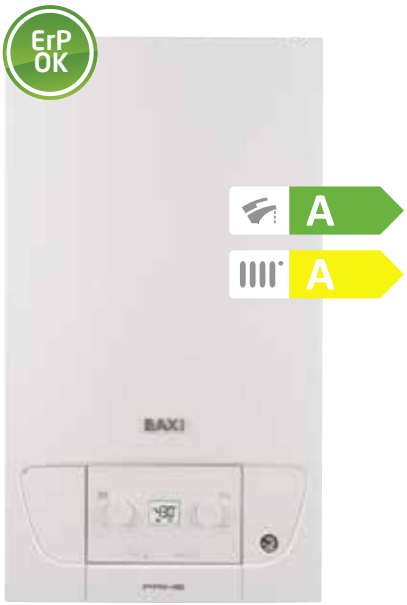

- Easy to use thanks to the control panel with knobs and back-lighted LCD display
- Easy to install thanks to the ultra compact dimensions (700x395x285 mm - knobs included) and to the light weight (26 kg)
- Easy replacement of existing gas boilers, thanks to the central flue outlet
- Modulation ratio 1:5 higher efficiency and noiseless operation
- Remote control Baxi Mago available as optional
- High efficiency circulating pump
- Integration with solar system option
- Connection to rigid and flexible Ø 50 mm flue pipe: solution for chimneys refurbishment, 40 m max length
- Connection to collective chimneys with positive pressure
- Functioning with natural gas, it can be switched to LPG and propane air mixture (no transformation kit required)

Hydraulic system

3 way electric diverter valve (also heating only models)
Stainless steel premixing burner
Stainless steel water/flue heat exchanger
Stainless steel DHW exchanger
Modulating fan with electronic speed adjusting system
Automatic by-pass
High efficiency pump
System to prevent pump and diverter valve sticking operating every 24 hours
Heating circuit relief valve set at 3 bar

Thermoregulation system

Modulating room unit (supplied as optional)

Control system

Overheat limit thermostat of the water/flue exchanger
Hydraulic pressure switch to prevent boiler operating in event of low water
Safety NTC sensor against flues overheat
Electronic temperatures control by NTC sensors
Full anti-frost device
Electronic thermometer
Heating circuit pressure gauge

		Combi				Heating only
Product code		24 CM00052	26 A7697100	28 CM00053	30 A7697101	1.24 CM00073
Maximum heat input (DHW)	kW	24,7	26,7	28,9	31	-
Maximum heat input (heating)	kW	20,6	20,6	24,7	24,7	24,7
Minimum heat input	kW	4,9	4,9	4,9	4,9	4,9
Rated heat output for DHW circuit	kW	24	26	28	30	-
Useful heat output at rated heat output and high temperature regime* P_4	kW	20	20	24	24	24
Useful heat output at 30% of rated heat output and low temperature regime** P_1	kW	6,7	6,7	8	8	8
Load profile		XL	XL	XL	XL	-
Seasonal space heating energy efficiency class		A	A	A	A	A
Water heating energy efficiency class		A	A	A	A	-
Seasonal space heating energy efficiency ηs	%	93	93	93	93	93
Useful efficiency at rated heat output and high temperature regime* $\eta 4$	%	88,1	88,1	88	88	88
Useful efficiency at 30% of rated heat output and low temperature regime** $\eta 1$	%	97,8	97,8	97,8	97,8	97,8
Efficiency Pn (lower calorific value) - average temperature 70 °C	%	97,8	97,8	97,7	97,7	97,7
Efficiency 30% (lower calorific value) - return temperature 30 °C	%	108,6	108,6	108,6	108,6	108,6
NOx emissions	mg/kWh	38	38	40	40	40
Minimum working temperature	°C	-5	-5	-5	-5	-5
Expansion vessel capacity	l	7	7	7	7	7
Heating temperature range	°C	25-80	25-80	25-80	25-80	25-80
DHW temperature range	°C	35-60	35-60	35-60	35-60	-
Specific flow (EN 13203-1)	l/min	11,5	12,4	13,4	14,3	-
DHW production ΔT 25°C (1)	l/min	13,8	14,9	16,1	17,2	-
Minimum capacity DHW flow rate	l/min	2	2	2	2	-
Minimum pressure heating circuit	bar	0,5	0,5	0,5	0,5	0,5
Minimum pressure DHW circuit	bar	0,15	0,15	0,15	0,15	-
Maximum pressure heating circuit	bar	3	3	3	3	3
Maximum pressure DHW circuit	bar	8	8	8	8	-
Coaxial flue system Ø 60/100 max length	m	10	10	10	10	10
Dual flue system Ø 80 max length	m	80	80	80	80	80
Dual flue system Ø 50 max length	m	40	35	30	30(2)	30
Maximum flue mass flow rate	kg/s	0,012	0,013	0,014	0,015	0,012
Minimum flue mass flow rate	kg/s	0,002	0,002	0,002	0,002	0,002
Maximum flue temperature	°C	80	80	80	80	80
Dimensions (h x w x d)	mm	700 x 395 x 279				
Net weight	kg	26	26	26	26	26
Gas type		Natural gas/LPG/propane air mix				
Rated power supply	W	84	86	94	100	84
Auxiliary electrical power consumption - Full load *elmax*	kW	0,028	0,028	0,038	0,038	0,038
Auxiliary electrical power - Partial load *elmin*	kW	0,011	0,011	0,011	0,011	0,011
Auxiliary electrical power - Stand-by P_{SB}	kW	0,003	0,003	0,003	0,003	0,003
Sound power level, indoor L_{WA}	dB	48	48	50	50	50
Grade of protection		IPX5D	IPX5D	IPX5D	IPX5D	IPX5D

* High temperature regime: 60°C return temperature at heater inlet and 80°C flow temperature at heater outlet
** Low temperature: 30°C return temperature (at heater inlet)
(1) without flow restrictor
(2) with this type of flue duct it is necessary to lowering the power the appliance to 28 kW (see boiler manual)

Heating only models are connectable to indirect cylinders (p. 22-23)

Technical pages

111, 125-126, 129-130	25-29	30-31, 35-36	31-33	34	29, 34

Duo-tec Compact GA

Non ErP models

- Digital control panel with back-lighted wide LCD display
- Wide modulation ratio up to 1:7 better efficiency and noiseless operation
- Compact dimensions (700x400x299 mm)
- Gas Adaptive Control (GAC) system: combustion automatic control to maintain constantly the highest level of efficiency
- Remote control Baxi Mago available as optional
- Integration with solar system option
- Ø50 mm flue pipe mod. 24 kW, 40 m max length
- New upper cover available as optional that allows the outdoor installation (in partially protected locations) of the boiler

Hydraulic system

3 way electric diverter valve (also heating only models)
Stainless steel premixing burner
Stainless steel water/flue heat exchanger
Stainless steel DHW exchanger
Modulating fan with electronic speed adjusting system
Automatic by-pass
Single speed low energy pump of the heating circuit with built-in air vent
System to prevent pump and diverter valve sticking operating every 24 hours
Heating circuit relief valve set at 3 bar

Thermoregulation system

Built-in climatic regulation (outdoor sensor available as optional)
Control of multi-zones system option

Control system

Overheat limit thermostat of the water/flue exchanger
Hydraulic pressure switch to prevent boiler operating in event of low water
Safety NTC sensor against flues overheat
Electronic temperatures control by NTC sensors
Full anti-frost device
Electronic thermometer
Heating circuit pressure gauge

		Combi		Heating only
		24 GA	28 GA	1.24 GA
Product code		7722038	7722039	7722037
Maximum DHW heat input	kW	24,7	28,9	-
Maximum heating heat input	kW	20,6	24,7	24,7
Maximum DHW heat output	kW	24	28	-
Maximum heating heat output 80/60°C	kW	20	24	24
Maximum heating heat output 50/30°C	kW	21,8	26,1	26,1
Minimum heating heat output 80/60°C	kW	3,4	3,8	3,4
Minimum heating heat output 50/30°C	kW	3,7	4,1	3,7
Nominal efficiency 80/60°C	%	97,7	97,7	97,6
Nominal efficiency 50/30°C	%	105,8	105,8	105,7
Efficiency 30%	%	107,6	107,6	107,6
NOx class (EN 483)		5	5	5
Minimum working temperature	°C	-5	-5	-5
Expansion vessel capacity/pre-charge	l/bar	7/0,8	7/0,8	7/0,8
Heating temperature range.	°C	25-80	25-80	25-80
DHW temperature range	°C	35-60	35-60	-
DHW production ΔT 25°C [1]	l/min	13,8	16,1	-
Minimum capacity DHW flow rate	l/min	2	2	-
Minimum pressure DHW circuit	bar	0,15	0,15	-
Maximum pressure heating circuit	bar	3	3	3
Maximum pressure DHW circuit	bar	8	8	-
Coaxial flue system Ø 60/100 max length	m	10	10	10
Dual flue system Ø 80 max length	m	80	80	80
Maximum flue mass flow rate	kg/s	0,012	0,014	0,012
Minimum flue mass flow rate	kg/s	0,002	0,002	0,002
Maximum flue temperature	°C	80	80	80
Dimensions (h x w x d)	mm	700 x 400 x 299	700 x 400 x 299	700 x 400 x 299
Net weight	kg	34	34	30
Gas type			Natural Gas/LPG	
Rated power supply	W	102	114	102
Grade of protection		IPX5D	IPX5D	IPX5D

[1] without flow restrictor.
Heating only models are connectable to indirect cylinders (p. 23)

Technical pages

113, 125-126, 129-131	25-29	30-31, 35-36	31-33	34

Nuvola Platinum+

- Wide modulation ratio up to 1:10 better efficiency and noiseless operation
- Gas Adaptive Control (GAC) system: combustion automatic control to maintain constantly the highest level of efficiency
- High efficiency full modulating pump
- Removable control panel for wall-hung installation with wide text display, regulation knob, menu selection buttons and back-lighting; supplied with the boiler
- High DHW performances: up to 500 lt in 30 minutes (ΔT 30°C)
- Built-in solar control
- Stainless steel 40 lt cylinder
- Remote control Baxi Mago available as optional
- Frontal access for advanced diagnostics
- Ø50 mm flue pipe mod. 24 kW, 40 m max length
- Installation kit supplied with the boiler (telescopic connection pipes/gas inlet/gas tap)

Hydraulic system
3 way electric diverter valve
Stainless steel premixing burner
Stainless steel heat exchanger
Stainless steel tank
Modulating fan with electronic speed adjusting system
Automatic by-pass
High efficiency full modulating pump of the heating circuit with built-in air vent
System to prevent pump and diverter valve sticking operating every 24 hours
Heating circuit relief valve set at 3 bar
Tank relief valve set at 8 bar
Integrated sanitary 2 litres expansion vessel
Sanitary recirculation option

Thermoregulation system
Built-in climatic regulation (outdoor sensor available as optional)
Control of multi-zones system option
Room sensor, heating circuit and sanitary timers included in the control panel

Control system
Overheat limit thermostat of the water/flue exchanger
Hydraulic pressure switch to prevent boiler operating in event of low water
Overheat limit thermostat against flues overheat
Electronic temperatures control by NTC sensors
Anti legionella function
Full anti-frost device
Electronic thermometer
Digital heating circuit pressure gauge

		Combi with DHW storage	
Product code		24 GA 7219698	33 GA 7219699
Maximum heat input (DHW)	kW	24,7	34
Maximum heat input (heating)	kW	16,5	24,7
Minimum heat input	kW	2,5	3,4
Rated heat output for DHW circuit	kW	24	33
Useful heat output at rated heat output and high temperature regime* P_4	kW	16	24
Useful heat output at 30% of rated heat output and low temperature regime** P_1	kW	5,4	8
Load profile		XL	XL
Seasonal space heating energy efficiency class		A	A
Water heating energy efficiency class		A	A
Seasonal space heating energy efficiency ηs	%	93	93
Useful efficiency at rated heat output and high temperature regime* $\eta 4$	%	88	87,9
Useful efficiency at 30% of rated heat output and low temperature regime** $\eta 1$	%	98,1	98,1
Efficiency Pn (lower calorific value) - average temperature 70 °C	%	97,7	97,6
Efficiency 30% (lower calorific value) - return temperature 30 °C	%	108,9	108,9
NOx emissions	mg/kWh	18	26
Minimum working temperature	°C	-5	-5
Expansion vessel capacity	l	7,5	7,5
Heating temperature range	°C	25-80	25-80
DHW temperature range	°C	35-60	35-60
Tank capacity	l	40	40
Tank expansion vessel capacity	l	2	2
Specific flow (EN 13203-1)	l/min	14,9	18,3
DHW production ΔT 25°C (1)	l/min	13,8	18,9
DHW production at discharge ΔT 30°C (1)	l/30'	385	500
Maximum pressure heating circuit	bar	3	3
Maximum pressure DHW circuit	bar	8	8
Coaxial flue system Ø 60/100 max length	m	10	10
Dual flue system Ø 80 max length	m	80	80
Maximum flue mass flow rate	kg/s	0,012	0,016
Minimum flue mass flow rate	kg/s	0,001	0,002
Maximum flue temperature	°C	80	80
Dimensions (h x w x d)	mm	950 x 600 x 466	
Net weight	kg	65,5	67,5
Gas type		Natural gas/LPG	
Rated power supply	W	91	105
Auxiliary electrical power consumption - Full load *elmax*	kW	0,025	0,035
Auxiliary electrical power - Partial load *elmin*	kW	0,012	0,012
Auxiliary electrical power - Stand-by P_{SB}	kW	0,004	0,004
Sound power level, indoor L_{WA}	dB	49	53
Grade of protection		IPX5D	IPX5D

* High temperature regime: 60°C return temperature at heater inlet and 80°C flow temperature at heater outlet
** Low temperature: 30°C return temperature (at heater inlet)
(1) without flow restrictor

Technical pages

113, 125-126, 129-131	25-29	30-31, 35-36	31-33	34

Nuvola Duo-tec+

- Wide modulation ratio up to 1:7 better efficiency and noiseless operation
- Gas Adaptive Control (GAC) system: combustion automatic control to maintain constantly the highest level of efficiency
- High DHW performances: up to 500 lt in 30 minutes (ΔT 30°C)
- Stainless steel 40 lt cylinder
- Digital control panel with back-lighted LCD display
- Remote control Baxi Mago available as optional
- Included DHW expansion vessel (mod. 33 GA VES)
- High efficiency full modulating circulating pump
- Frontal access for advanced diagnostics
- Ø50 mm flue pipe mod. 24 kW, 40 m max length
- Installation kit supplied with the boiler (telescopic connection pipes/gas inlet/gas tap)

Hydraulic system
3 way electric diverter valve
Stainless steel premixing burner
Stainless steel heat exchanger
Stainless steel tank
Modulating fan with electronic speed adjusting system
Automatic by-pass
High efficiency full modulating pump of the heating circuit with built-in air vent
System to prevent pump and diverter valve sticking operating every 24 hours
Central relief valve set at 3 bar
Tank relief valve set at 8 bar
Sanitary 4 litres expansion vessel available as optional (mod. 16, 24 kW)
Sanitary recirculation option

Thermoregulation system
Built-in climatic regulation (outdoor sensor available as optional)
Control of multi-zones system option

Control system
Overheat limit thermostat of the water/flue exchanger
Hydraulic pressure switch to prevent boiler operating in event of low water
Overheat limit thermostat against flues overheat
Electronic temperatures control by NTC sensors
Anti legionella function
Full anti-frost device
Electronic thermometer
Digital heating circuit pressure gauge

		Combi		
Product code		16 GA 7219553	24 GA 7219554	33 GA VES 7219555
Maximum heat input (DHW)	kW	16,5	24,7	34
Maximum heat input (heating)	kW	12,4	20,6	28,9
Minimum heat input	kW	2,3	3,5	4,8
Rated heat output for DHW circuit	kW	16	24	33
Useful heat output at rated heat output and high temperature regime* P_4	kW	12	20	28
Useful heat output at 30% of rated heat output and low temperature regime** P_1	kW	4	6,7	9,4
Load profile		XL	XL	XL
Seasonal space heating energy efficiency class		A	A	A
Water heating energy efficiency class		A	A	A
Seasonal space heating energy efficiency *ηs*	%	92	93	93
Useful efficiency at rated heat output and high temperature regime* *η4*	%	88,1	88	88
Useful efficiency at 30% of rated heat output and low temperature regime** *η1*	%	98	98	98,1
Efficiency Pn (lower calorific value) - average temperature 70 °C	%	97,8	97,7	97,7
Efficiency 30% (lower calorific value) - return temperature 30 °C	%	108,8	108,8	108,9
NOx emissions	mg/kWh	22	15	15
Minimum working temperature	°C	-5	-5	-5
Expansion vessel capacity	l	7,5	7,5	7,5
Heating temperature range	°C	25-80	25-80	25-80
DHW temperature range	°C	35-60	35-60	35-60
Tank capacity	l	40	40	40
Tank expansion vessel capacity	l	2	2	2
Specific flow (EN 13203-1)	l/min	11,1	14,9	18,3
DHW production ΔT 25°C (1)	l/min	9,2	13,8	18,9
Maximum pressure heating circuit	bar	3	3	3
Maximum pressure DHW circuit	bar	8	8	-
Coaxial flue system Ø 60/100 max length	m	10	10	10
Dual flue system Ø 80 max length	m	80	80	80
Maximum flue mass flow rate	kg/s	0,008	0,012	0,016
Minimum flue mass flow rate	kg/s	0,001	0,002	0,002
Maximum flue temperature	°C	75	80	80
Dimensions (h x w x d)	mm	950 x 600 x 466		
Net weight	kg	62	62	67,5
Gas type		Natural gas/LPG		
Rated power supply	W	76	88	106
Auxiliary electrical power consumption - Full load *elmax*	kW	0,025	0,030	0,041
Auxiliary electrical power - Partial load *elmin*	kW	0,013	0,013	0,013
Auxiliary electrical power - Stand-by P_{SB}	kW	0,003	0,003	0,003
Sound power level, indoor L_{WA}	dB	52	49	53
Grade of protection		IPX5D	IPX5D	IPX5D

* High temperature regime: 60°C return temperature at heater inlet and 80°C flow temperature at heater outlet
** Low temperature: 30°C return temperature (at heater inlet)
(1) without flow restrictor

Technical pages

114, 125-126, 129-131	25-29	30-31, 35-36	31-33	34	29

Luna IN Plus NEW

- INCLUDED remote digital control panel with LCD display
- WI-FI control panel kit available as optional: Hybrid App for smartphone and tablet to remotely control Luna IN Plus
- Multi-zones system connection
- Built-in installation: thanks to its ultra-compact dimensions 770x470x238 mm Luna IN Plus can be installed in most retaining cases on the market
- INCLUDED built-in telescopic connection pipes kit (telescopic connection pipes/gas inlet/gas tap)
- Automatic filling system
- Minimum working temperature: -15°C
- Anti-frost function and grade of protection IPX5D
- Wide modulation ratio up to 1:7, better efficiency and noiseless operation
- Gas Adaptive Control (GAC) system: combustion automatic control
- Outdoor wall hung installation in partially protected sites with telescopic connections kit (gas tap/DHW tap) available as optional
- Open air wall hung installation with upper cover kit available as optional
- Integration with solar system option
- Connection to rigid and flexible Ø 50 mm flue pipe: solution for chimney refurbishment and replacement of an exhisting open flue gas boiler, 40 m max length (mod. 24 kW)

Hydraulic system

3 way electric diverter valve (also heating only models)
Stainless steel premixing burner
Stainless steel water/flue heat exchanger
Stainless steel enhanced DHW exchanger to ensure condensation also in DHW mode
Modulating fan with electronic speed adjusting system
Automatic by-pass
High efficiency full modulating pump
System to prevent pump and diverter valve sticking operating every 24 hours
Safety valve set at 3 bar

Thermoregulation system

Room sensor, heating and DHW control integrated in the remote control
Built-in climatic regulation (outdoor sensor available as optional)
Control of multi-zones system option

Control system

Overheat limit thermostat of the water/flue exchanger
Hydraulic pressure switch to prevent boiler operating in event of low water
Safety NTC sensor against flues overheat
Electronic temperatures control by NTC sensors
Full anti-frost device
Electronic thermometer
Digital heating circuit pressure gauge

		Combi		Heating only
Product code		26 A7736264	30 A7736265	1.24 A7736263
Maximum heat input (DHW)	kW	26,8	30	-
Maximum heat input (heating)	kW	20,6	24,7	24,7
Minimum heat input	kW	3,9	3,9	3,5
Rated heat output for DHW circuit	kW	26	29	-
Useful heat output at rated heat output and high temperature regime* P_4	kW	20	24	24
Useful heat output at 30% of rated heat output and low temperature regime** P_1	kW	6,7	8,1	8
Load profile		XL	XL	-
Seasonal space heating energy efficiency class		A	A	A
Water heating energy efficiency class		A	A	-
Seasonal space heating energy efficiency ηs	%	94	94	93
Useful efficiency at rated heat output and high temperature regime* $\eta 4$	%	88	87,9	87,9
Useful efficiency at 30% of rated heat output and low temperature regime** $\eta 1$	%	98,9	98,8	98
Efficiency Pn (lower calorific value) - average temperature 70 °C	%	97,7	97,6	97,6
Efficiency 30% (lower calorific value) - return temperature 30 °C	%	109,8	109,7	108,8
NOx emissions	mg/kWh	15	17	16
Minimum working temperature	°C	-15	-15	-15
Expansion vessel capacity	l	8	8	8
Heating temperature range	°C	25-80	25-80	25-80
DHW temperature range	°C	35-60	35-60	-
Specific flow (EN 13203-1)	l/min	12,4	14	-
DHW production ΔT 25°C [1]	l/min	14,9	16,6	-
Minimum capacity DHW flow rate	l/min	2	2	-
Minimum pressure heating circuit	bar	0,5	0,5	0,5
Minimum pressure DHW circuit	bar	0,15	0,15	0,15
Maximum pressure heating circuit	bar	3	3	3
Maximum pressure DHW circuit	bar	8	8	8
Coaxial flue system Ø 60/100 max length	m	10	10	10
Dual flue system Ø 80 max length	m	80	80	80
Maximum flue mass flow rate	kg/s	0,013	0,014	0,012
Minimum flue mass flow rate	kg/s	0,002	0,002	0,002
Maximum flue temperature	°C	80	80	80
Dimensions (h x w x d)	mm	770 x 470 x 238		
Net weight	kg	32,5	32,5	28,5
Gas type		Natural gas/LPG		
Rated power supply	W	87	104	85
Auxiliary electrical power consumption - Full load *elmax*	kW	0,030	0,042	0,030
Auxiliary electrical power - Partial load *elmin*	kW	0,013	0,013	0,013
Auxiliary electrical power - Stand-by P_{SB}	kW	0,003	0,003	0,003
Sound power level, indoor L_{WA}	dB	49	48	52
Grade of protection		IPX5D	IPX5D	IPX5D

* High temperature regime: 60°C return temperature at heater inlet and 80°C flow temperature at heater outlet
** Low temperature: 30°C return temperature (at heater inlet)
[1] without flow restrictor

Heating only models are connectable to indirect cylinders (p. 22-23)

Technical pages

115, 125-126, 129-131	25-29	30-31, 35-36	31-33	34	29

Luna Air NEW

- INCLUDED remote digital control panel with LCD display
- Outdoor wall hung installation in partially protected sites
- Open air wall hung installation with upper cover kit available as optional
- Electro zinc-coated outdoor cover
- Minimum working temperature: -15°C
- Anti-frost function and grade of protection IPX5D
- Wide modulation ratio up to 1:7, better efficiency and noiseless operation
- Gas Adaptive Control (GAC) system: combustion automatic control
- **Built-in installation:** thanks to its ultra-compact dimensions 770x470x238 mm Luna Air can be installed in most retaining cases on the market; the built-in telescopic connection pipes kit is available as optional
- Integration with Baxi solar system option
- WI-FI control panel kit available as optional: Hybrid App for smartphone and tablet to remotely control Luna Air
- Ø 50 mm flue pipe mod. 24 kW, 40 m max length

Hydraulic system

3 way electric diverter valve
Stainless steel premixing burner
Stainless steel water/flue heat exchanger
Stainless steel enhanced DHW exchanger to ensure condensation also in DHW mode (Combi models)
Modulating fan with electronic speed adjusting system
Automatic by-pass
High efficiency full modulating pump of the heating circuit with built-in air vent
System to prevent pump and diverter valve sticking operating every 24 hours
Heating circuit relief valve set at 3 bar

Thermoregulation system

Room sensor, heating circuit and sanitary timers included in the remote control panel
Built-in climatic regulation (outdoor sensor available as optional)

Control system

Overheat limit thermostat of the water/flue exchanger
Hydraulic pressure switch to prevent boiler operating in event of low water
Safety NTC sensor against flues overheat
Electronic temperatures control by NTC sensors
Full anti-frost device
Electronic thermometer
Digital heating circuit pressure gauge

		Heating and DHW production	
		24 A7736261	28 A7736262
Maximum heat input (DHW)	kW	24,7	28,9
Maximum heat input (heating)	kW	20,6	24,7
Minimum heat input	kW	3,5	3,9
Rated heat output for DHW circuit	kW	24	28
Rated heat output *Prated*	kW	20	24
Useful heat output at rated heat output and high temperature regime* P_4	kW	20	24
Useful heat output at 30% of rated heat output and low temperature regime** P_1	kW	6,7	8
Load profile		XL	XL
Seasonal space heating energy efficiency class		A	A
Water heating energy efficiency class		A	A
Seasonal space heating energy efficiency ηs	%	93	93
Water heating energy efficiency η_{wh}	%	88	86
Useful efficiency at rated heat output and high temperature regime* $\eta 4$	%	88	87,9
Useful efficiency at 30% of rated heat output and low temperature regime** $\eta 1$	%	98	98
Efficiency Pn (lower calorific value) - average temperature 70 °C	%	97,7	97,6
Efficiency 30% (lower calorific value) - return temperature 30 °C	%	108,8	108,8
Intermidiate efficiency (lower calorific value) - average temperature 70°C	%	98,1	98
NOx emissions	mg/kWh	15	17
Minimum working temperature	°C	-15	-15
Expansion vessel capacity	l	8	8
Heating temperature range	°C	25-80	25-80
DHW temperature range	°C	35-60	35-60
Specific flow (EN 13203-1)	l/min	11,5	13,4
DHW production ΔT 25°C (1)	l/min	13,8	16,1
Minimum capacity DHW flow rate	l/min	2	2
Minimum pressure heating circuit	bar	0,5	0,5
Minimum pressure DHW circuit	bar	0,15	0,15
Maximum pressure heating circuit	bar	3	3
Maximum pressure DHW circuit	bar	8	8
Coaxial flue system Ø 60/100 max length	m	10	10
Dual flue system Ø 80 max length	m	80	80
Maximum flue mass flow rate	kg/s	0,012	0,014
Minimum flue mass flow rate	kg/s	0,002	0,002
Maximum flue temperature	°C	80	80
Dimensions (h x w x d) - boiler	mm	770x470x238	
Dimensions (h x w x d) - with case	mm	1170x600x240	
Net weight	kg	32,5	32,5
Gas type		Natural Gas/LPG	
Rated power supply	W	85	99
Auxiliary electrical power consumption - Full load *elmax*	kW	0,030	0,042
Auxiliary electrical power - Partial load *elmin*	kW	0,013	0,013
Auxiliary electrical power - Stand-by P_{SB}	kW	0,003	0,003
Sound power level, indoor L_{WA}	dB	49	50
Grade of protection		IPX5D	

* High temperature regime: 60°C return temperature at heater inlet and 80°C flow temperature at heater outlet
** Low temperature: 30°C return temperature (at heater inlet)
(1) without flow restrictor

Heating only models are connectable to indirect cylinders (p. 22-23)

Technical pages

116-117, 125-126, 129-130 | 25-29 | 30-31, 35-36 | 31-33

Power 32

- Wide modulation ratio up to 1:10 better efficiency and noiseless operation
- GAC (Gas Adaptive Control) system: combustion automatic control
- High efficiency full modulating circulating pump
- Vitrified enamelled stratified steel cylinder - 220 lt capacity - with coil exchanger for solar integration (mod. Solar)
- Vitrified enamelled steel cylinder - 160 lt capacity - with single coil exchanger (mod. Combi)
- Mixing system (1 high tempertature + 1 low temperature) available as optional
- Solar hydraulic group supplied with the cylinder (pump, safety valve, flow rate regulator, air vent) (mod. Solar)
- Solar expansion vessel supplied with the cylinder (mod. Solar)
- DHW expansion vessel supplied with the cylinder (mod. Combi and mod. Solar)
- Built-in exchanger - tank recirculation
- Removable control panel for wall-hung installation with wide text display, regulation knob, menu selection buttons and back-lighting; supplied with the boiler
- Outdoor sensor supplied with the boiler

Product code		Combi with DHW storage Combi 160 A7213896	Combi with DHW storage and solar integration Solar 220 A7213895	Heating only 1.32 A7213869
Maximum heat input (DHW)	kW	33	33	-
Maximum heat input (heating)	kW	33	33	33
Minimum heat input	kW	3,3	3,3	3,3
Rated heat output for DHW circuit	kW	32	32	-
Useful heat output at rated heat output and high temperature regime* P_4	kW	32	32	32
Useful heat output at 30% of rated heat output and low temperature regime** P_1	kW	5,5	5,5	5,5
Load profile		XL	XL	-
Seasonal space heating energy efficiency class		A	A	A
Water heating energy efficiency class		A	A	-
Seasonal space heating energy efficiency ηs	%	92	92	92
Useful efficiency at rated heat output and high temperature regime* $\eta 4$	%	87,9	87,9	87,9
Useful efficiency at 30% of rated heat output and low temperature regime** $\eta 1$	%	97,3	97,3	97,3
Efficiency Pn (lower calorific value) - average temperature 70 °C	%	97,6	97,6	97,6
Efficiency 30% (lower calorific value) - return temperature 30 °C	%	108	108	108
NOx emissions	mg/kWh	28	28	28
Minimum capacity DHW flow rate	°C	-5	-5	-5
Heating circuit expansion vessel capacity	l	18	18	18
Solar vessel capacity	l	-	18	-
Heating temperature range	°C	20-80	20-80	20-80
DHW temperature range	°C	35-60	35-60	-
DHW vessel capacity	l	8	8	-
Maximum pressure heating circuit	bar	3	3	3
Maximum pressure DHW circuit	bar	7	7	7
Maximum pressure solar circuit	bar	-	6	-
Coaxial flue system Ø 60/100 max length	m	10	10	10
Dual flue system Ø 80 max length	m	80	80	80
Maximum flue mass flow rate	kg/s	0,015	0,015	0,015
Minimum flue mass flow rate	kg/s	0,002	0,002	0,002
Maximum flue temperature	°C	80	80	80
Dimensions (h x w x d)	mm	1742 x 600 x 780	2042 x 600 x 780	918 x 600 x 720
Net weight	kg	144	187	62
Gas type			Natural gas/LPG	
Rated power supply	W	145	282	145
Auxiliary electrical power consumption - Full load *elmax*	kW	0,075	0,075	0,075
Auxiliary electrical power - Partial load *elmin*	kW	0,015	0,015	0,015
Auxiliary electrical power - Stand-by P_{SB}	kW	0,004	0,004	0,004
Sound power level, indoor L_{WA}	dB	56	56	56
Grade of protection		IPX5D	IPX5D	IPX5D

* High temperature regime: 60°C return temperature at heater inlet and 80°C flow temperature at heater outlet
** Low temperature: 30°C return temperature (at heater inlet)

Heating only models are connectable to indirect cylinders (p. 22-23)

Hydraulic system

3 way electric diverter valve
Stainless steel premixing burner
Stainless steel heat exchanger with sound proofing composite casing
Stainless steel enhanced DHW exchanger to ensure condensation also in DHW mode
220 lt thermal stratification cylinder made of vitrified steel with solar integration through coil exchanger
Modulating fan with electronic speed adjusting system
Automatic by-pass
System to prevent pump and diverter valve sticking operating every 24 hours
Heating circuit relief valve set at 3 bar
Cylinder relief valve set at 7 bar
Circulating pump for the cylinder
Cylinder expansion vessel 8 litres
Solar expansion vessel 18 litres
Solar hydraulic group (pump, safety valve, flow rate regulator, air vent)
Thermostatic mixing valve on the DHW outlet of the cylinder
Built-in sanitary recirculation option

Thermoregulation system

Built-in solar controller (pump and two temperature sensors)
Built-in climatic regulation
Control of second low temperature zone option
Room sensor, central heating and sanitary timers included in the control panel

Control system

Overheat limit thermostat for the water/flue exchanger
Hydraulic pressure switch to prevent boiler operating in the event of low water
Safety NTC sensor against flues overheat
Electronic temperatures control by NTC sensors
Anti-legionella function
Full anti-frost device
Electronic thermometer
Heating circuit pressure gauge

UB 120/160 SC

Cylinder for DHW production for heating only boilers

- Enamelled vitrified steel indirect cylinder
- Connectable to heating only boilers, hot water temperature sensor cod. KHG 71407681 to be ordered separately
- Indirect cylinder temperature controlled directly on the boiler's control panel
- Magnesium anode

Product code		UB 120 SC A7223234	UB 160 SC A7223235
Efficiency class Heating/DHW		C	C
Stainless steal cylinder capacity	l	115	150
Maximum pressure in DHW circuit	bar	8	8
Standing loss	W	69	76
Specific loss	W/k	1,53	1,69
Coil heat exchange (max)	kW	27	34
Coil capacity	l	3,9	5
Coil maximum pressure	bar	6	6
Dimensions (hxØ)	mm	723 x 560	923 x 560
Empty weight	kg	54,5	65,5

Technical pages
118

Combi 80 L+

DHW for Luna Platinum+ and Luna Duo-tec E heating only boilers

- Stainless steel indirect cylinder for Luna Platinum+, Luna Duo-tec E and Luna Duo-tec+ heating only boilers
- 4 lt DHW expansion vessel
- Included hot water temperature sensor
- Indirect cylinder temperature controlled directly on the boiler's control panel
- Included connection kit

Product code		7113493
Stainless steal cylider capacity	l	79
Coil heat exchange	kW	33
Dimensions (hxwxd)	mm	977 x 450 x 540
Empty weight	kg	45

Possible combinations:

Luna Platinum+ and Combi 80 L+

A
A
Load profile: XL

+

=

Models:
Luna Platinum+ 1.32 GA - cod. 7219691
Luna Platinum+ 1.24 GA - cod. 7219690
Luna Platinum+ 1.12 GA - cod. 7219688

Combi 80 L+ - cod. 7113493

Combinations:
Luna Platinum+ 1.32/Combi 80 L+
Luna Platinum+ 1.24/Combi 80 L+
Luna Platinum+ 1.12/Combi 80 L+

Luna Duo-tec E and Combi 80 L+

A
A
Load profile: XL

+

=

Models:
Luna Duo-tec E 1.28 - cod. A7720024
Luna Duo-tec E 1.24 - cod. A7720023
Luna Duo-tec E 1.12 - cod. A7720022

Combi 80 L+ - cod. 7113493

Combinations:
Luna Duo-tec E 1.28/Combi 80 L+
Luna Duo-tec E 1.24/Combi 80 L+
Luna Duo-tec E 1.12/Combi 80 L+

Duo-tec Compact E and UB 160 SC

A
A
Load profile: XL

+

=

Model:
Duo-tec Compact E 1.24 - cod. A7722080

UB 160 SC - cod. A7223235

Combination:
Duo-tec Compact E/UB 160 SC

Coaxial flue system for gas condensing boilers

		Code
	PP coaxial flue pipes with terminal Ø 60/100 L=750 mm supplied with windproof terminal and sealing collar For all gas condensing boilers	KHG 71405961
	PP coaxial flue pipe extension Ø 60/100 L=1000 mm For all gas condensing boilers	KHG 71405951
	Coaxial flue pipe extension L=500 - Ø 60/100 For all gas condensing boilers	KHG 71411981
	PP coaxial flue pipe extension with checking profile - Ø 60/100 L=310 mm For all gas condensing boilers	KHG 71411951
	PP coaxial 90° bend Ø 60/100 For all gas condensing boilers	KHG 71405971
	90° lowered bend Ø 60/100 For Prime	KA00049
	Coaxial 90° bend with checking profile - Ø 60/100 For all gas condensing boilers	KHG 71411931
	PP coaxial 45° bend Ø 60/100 For all gas condensing boilers	KHG 71405981
	PP coaxial flue pipes with terminal Ø 80/125 L=1000 mm supplied with windproof terminal and sealing collar For all gas condensing boilers	KHG 71408891
	PP coaxial flue pipe extension with checking profile - Ø 80/125 L=245 mm For all gas condensing boilers	KA00054
	Coaxial 90° bend with checking profile - Ø 80/125 For all gas condensing boilers	KA00055
	PP coaxial flue pipe extension Ø 80/125 L=1000 mm For all gas condensing boilers	KHG 71408851
	PP coaxial flue pipe extension Ø 80/125 L=500 mm For all gas condensing boilers	KHG 71408861
	PP coaxial 90° bend Ø 80/125 For all gas condensing boilers	KHG 71408871
	PP coaxial 45° bend Ø 80/125 For all gas condensing boilers	KHG 71408881
	Internal sealing collar Ø 100 For all gas condensing boilers	KHG 71401771
	PP vertical chimney terminal Ø 60/100 For all gas condensing boilers	KUG 71413581
	Pitched roof tile Ø 100 For all gas condensing boilers	KHG 71403661
	PP vertical chimney terminal Ø 80/125 (accessory cod. KHG 71409391 must be ordered) For all gas condensing boilers	KHG 71409351
	PP reduction from Ø 80/125 to Ø 60/100 For all gas condensing boilers	KHG 71409391

Coaxial flue system for gas condensing boilers

		Code
	Flat roof tile to be used with a vertical chimney terminal Ø 125 For all gas condensing boilers	KHG 71409361
	Pitched roof tile to be used with a vertical chimney terminal Ø 125; it is adjustable from 15° to 45° For all gas condensing boilers	KHG 71409371

Dual flue system for gas condensing boilers

		Code
	PP adjustable dual flue system Ø 80 Not for Prime	7102689
	PP adjustable dual flue system Ø 80 For Prime	KA00048
	PP dual flue system Ø 80 it includes: flue reduction, intake connection Not for Duo-tec Compact E, Prime, Duo-tec Compact GA	KHG 71405911
	PP vertical flue system B23 type installation Ø 80 For all gas condensing boilers	KHG 71411101
	PP pipe extension Ø 80 L=1000 mm For all gas condensing boilers	KHG 71405941
	PP pipe extension Ø 80 L=500 mm For all gas condensing boilers	KHG 71405991
	PP pipe extension Ø 80 L=250 mm For all gas condensing boilers	7107183
	PP 90° bend Ø 80 For all gas condensing boilers	KHG 71405921
	PP 45° bend Ø 80 For all gas condensing boilers	KHG 71405931
	Dual flue terminal Ø 80 For all gas condensing boilers	KHG 71401041
	PP reduction M/F from Ø 80 to Ø 60 Not for Power32	KHG 71407561
	PP pipe extension Ø 60 L=1000 mm Not for Power32	KHG 71407531
	PP pipe extension Ø 60 L=500 mm Not for Power32	KHG 71407521
	PP 90° bend Ø 60 Not for Power32	KHG 71407541
	PP 45° bend Ø 60 Not for Power32	KHG 71407551

Dual flue system for gas condensing boilers

		Code
	Dual flue terminal Ø 60 Not for Power32	KHG 71403721
	PP reduction M/F from Ø 80 to Ø 50 For all 24 kW gas condensing boilers (Prime also 26, 28 and 30 kW models)	7107175
	PP pipe extension Ø 50 L=500 mm For all 24 kW gas condensing boilers (Prime also 26, 28 and 30 kW models)	7107174
	PP pipe extension Ø 50 L=1000 mm For all 24 kW gas condensing boilers (Prime also 26, 28 and 30 kW models)	7107057
	PP pipe extension Ø 50 L=2000 mm For all 24 kW gas condensing boilers (Prime also 26, 28 and 30 kW models)	7107058
	PP 90° bend Ø 50 For all 24 kW gas condensing boilers (Prime also 26, 28 and 30 kW models)	7107060
	PP 45° bend Ø 50 For all 24 kW gas condensing boilers (Prime also 26, 28 and 30 kW models)	7107059
	90° flue terminal Ø 50 For all 24 kW gas condensing boilers (Prime also 26, 28 and 30 kW models)	7107176
	Clamp centring kit Ø 80 For all gas condensing boilers	KHG 71410611
	Pipe Ø 60 centring kit (pack of 5) For all gas condensing boilers	KHG 71403741
	Pipe Ø 80 supporting bracket (pack of 5) For all gas condensing boilers	KHG 71403731
	Air outlet flue socket kit For all fanned flue gas boilers	KHG 71405031
	Internal sealing collar Ø 80 For all gas condensing boilers	KHG 71401851
	External sealing collar Ø 80 For all gas condensing boilers	KHG 71401841
	Coaxial vertical chimney terminal Ø 80/125 (accessory cod. KHG 71409381 must be ordered) For all gas condensing boilers	KHG 71409351
	Dual flue pipes adapter for coaxial chimney from Ø 80/80 to Ø 80/125 For all gas condensing boilers	KHG 71409381
	Flat roof tile Ø 125 to be used with a vertical chimney terminal For all gas condensing boilers	KHG 71409361
	Pitched roof tile Ø 125 to be used with a vertical chimney terminal; it is adjustable from 15° to 45° For all gas condensing boilers	KHG 71409371
	Telescopic pipe extension Ø 80 (Duo-tec IN+) For Luna IN Plus, Luna Air	KHG 71410941

Dual flue system for gas condensing boilers

		Code
	Adapter kit Ø 60 (M) / Ø 80 (F) For replacement of standard efficiency boilers For Luna IN Plus and Luna Air Built-in models	KHG 71411521

Flexible ducting system for gas condensing boilers

		Code
	Reduction kit Ø 60 (M) / Ø 50 flexible pipe For all 24 kW gas condensing boilers (Prime also 26, 28 and 30 kW models)	KA00056
	Reduction kit Ø 60 (F) / Ø 50 flexible pipe For all 24 kW gas condensing boilers (Prime also 26, 28 and 30 kW models)	KA00057
	90° bend Ø 60 (M) / Ø 50 flexible pipe For all 24 kW gas condensing boilers (Prime also 26, 28 and 30 kW models)	KA00058
	45° bend Ø 60 (M) / Ø 50 flexible pipe For all 24 kW gas condensing boilers (Prime also 26, 28 and 30 kW models)	KA00059
	Reduction kit Ø 80 (M) / Ø 50 flexible pipe For all 24 kW gas condensing boilers (Prime also 26, 28 and 30 kW models)	KA00060
	Joint for flexible pipe Ø 50 For all 24 kW gas condensing boilers (Prime also 26, 28 and 30 kW models)	KA00061
	Flexible pipe Ø 50 L=12,5 m For all 24 kW gas condensing boilers (Prime also 26, 28 and 30 kW models)	KA00062
	Flexible centring kit Ø 50 (pack of 5) For all 24 kW gas condensing boilers (Prime also 26, 28 and 30 kW models)	KA00063
	T terminal for flexible pipe Ø 50 For all 24 kW gas condensing boilers (Prime also 26, 28 and 30 kW models)	KA00064
	Terminal for flexible pipe Ø 50 For all 24 kW gas condensing boilers (Prime also 26, 28 and 30 kW models)	KA00067
	Tube with checking profile Ø 50 For all 24 kW gas condensing boilers (Prime also 26, 28 and 30 kW models)	KA00068
	PP 90° bend Ø 60 (M) / Ø 50 flexible pipe with supporting bracket For all 24 kW gas condensing boilers (Prime also 26, 28 and 30 kW models)	KA00065
	PP flexible pipe Ø 80 L= 1,5 m Not for Power 32	KHG 71410571

Flexible ducting system for gas condensing boilers

		Code
	Joint bend Ø 80 for flexible pipe Not for Power 32	NEW A7725066
	PP T joint bend Ø 80 with supporting bracket and condensate drainings Not for Power 32	KHG 71410591
	PP 90° bend Ø 80 with supporting bracket Not for Power 32	KHG 71410601
	Flexible centring kit Ø 80 (pack of 3) Not for Power 32	KHG 71410621
	Triple lips gaskets kit Ø 80 (pack of 5) Not for Power 32	KHG 71411121

Special accessories in case of hard weather conditions

		Code
	Vertical coaxial flue terminal Ø 60/100 for condensing boiler For all gas condensing boilers	KUG 71413581
	Vertical coaxial flue terminal Ø 80/125 for condensing boiler For all gas condensing boilers	KUG 71413591

Replacement kits

		Code
	Universal replacement kit: it includes fittings and flexible stainless steel pipes For Luna Platinum+, Luna Duo-tec E, Duo-tec Compact E, Prime, Duo-tec Compact GA, Luna IN Plus, Luna Air	7215673

Installation templates

		Code
	Metal template For Luna Platinum+, Luna Duo-tec E	7109786
	Metal template For Duo-tec Compact E, Duo-tec Compact GA	7109787
	Metal template For Prime	KA00070

Hydraulic accessories

	Code
Magnetic dirt separator filter For Luna Platinum+, Luna Duo-tec E, Duo-tec Compact E, Duo-tec Compact GA, Prime	A7711843
Brass magnetic dirt separator filter For Luna Platinum+, Luna Duo-tec E, Duo-tec Compact E, Duo-tec Compact GA, Prime	A7694146
Heating systems taps with filter For Luna Platinum+, Luna Duo-tec E, Duo-tec Compact E, Duo-tec Compact GA, Prime	7109314
Telescopic connection pipes with gas and mains water valves For Luna Platinum+, Luna Duo-tec E, Duo-tec Compact E, Duo-tec Compact GA, Prime Luna IN Plus, Luna Air	7106980
Heating tap kit without filter For Luna Platinum+, Luna Duo-tec E, Duo-tec Compact E, Luna IN Plus, Luna Air, Nuvola Platinum+, Nuvola Duo-tec+	KHG 71402201
Additional expansion vessel (2 lt) For Nuvola Duo-tec+ (only for 16 kW and 24 kW models)	KHG 71407971
7m head Grundfus pump Not for Prime, Power 32	7665783
Recirculating kit For Nuvola Platinum+, Nuvola Duo-tec+	KHG 71402271
Right side connection pipes (frontal view) For Power 32	A7213879
Left side connection pipes (frontal view) For Power 32	A7213880
Central connection pipes (frontal view) For Power 32	A7213878
Connection pipes and cover for 160 lt tank side connection For Power 32	A7213884
Connection pipes and cover for 220 lt tank side connection For Power 32	A7213883
Mixing zone kit including controller For Power 32	A7648847
Installation template with gas and mains water valves, pressure gauge and flow/return pipes For Power 32	A7213881
Central connection pipe - heating only For Power 32 - heating only model	A7213885

Hydraulic accessories

		Code
	Connection pipes for indirect cylinder connection (compulsory installation in case of integrated cylinder capacity other than l 160 and l 200) For Power 32	A7656332
	Condensate drain kit for condensing boilers up to 45 kW Features: - PP flexible outlet pipe length 6 m x Ø 6 mm - Maximum recommended head 10 m - Inlet adjuster for 22 and 28 mm pipes - Adjuster for flexible outlet pipe - Wall fasteners - Power cable 2 m It is designed to drain the condensate produced by residensial gas condensing boilers; This kit allows the implementation of a condensate drain system when a natural discharge next to the boileris missing. Compact design for a easy and quick installation under the boiler. Extrimely noiseless operation. For Luna IN Plus, Luna Air	7213162

Thermoregulation accessories

			Code
	Outdoor sensor For all gas condensing boilers		7104873
	Wireless outdoor sensor THINK wireless model to be ordered with the interface kit for remote control THINK - 5 leds (7102441) when the remote control is installed on the wall, or with the wireless aerial (7102343) when the remote control is installed in the boiler control panel For Luna Platinum+, Nuvola Platinum+, Power 32	think intelligence within	7103027
	3LEDs interface THINK with support For Luna Platinum+, Nuvola Platinum+, Power 32	think intelligence within	7102340
	Wireless 5LEDs interface THINK with support For Luna Platinum+, Nuvola Platinum+, Power 32	think intelligence within	7102441
	Wireless aerial-5 LEDs (it can be installed on the wall, as an alternative to code 7102441) For Luna Platinum+, Nuvola Platinum+, Power 32	think intelligence within	7102343
	Remote control THINK with support For Luna Platinum+, Nuvola Platinum+, Power 32	think intelligence within	7102442

Thermoregulation accessories

		Code
	Remote control THINK wireless For Luna Platinum+, Nuvola Platinum+, Power 32	7102443
	Room thermostat with timer THINK For Luna Platinum+, Nuvola Platinum+, Power 32	7102980
	Wireless room thermostat with timer THINK wireless model to be ordered with the interface kit for remote control THINK - 5 leds (7102441) when the remote control is installed on the wall, or with the wireless aerial (7102343) when the remote control is installed in the boiler control panel For Luna Platinum+, Nuvola Platinum+, Power 32	7102979
	Digital room thermostat For all gas condensing boilers	7663411
	Room thermostat RAA21 For all gas condensing boilers	KHG 71406281
	ON/OFF room thermostat For all gas condensing boilers	KHG 71408691
	ON/OFF weekly timer and room thermostat magic time plus For all gas condensing boilers	KHG 71408671
	Programmable clip-in module THINK (in case of mixing valve, order also Heating flow/return sensor clip-in module THINK code KHG 71407891) For Luna Platinum+, Nuvola Platinum+	7100345
	Heating flow/return sensor clip-in module THINK For Luna Platinum+, Nuvola Platinum+	KHG 71407891
	Programmable external module THINK (it includes heating flow/return sensor) For Luna Platinum+, Nuvola Platinum+	7105037
	Hot water temperature sensor For Luna Platinum+, Luna Duo-tec E, Luna IN Plus	KHG 71407681

Thermoregulation accessories

		Code
	Chronothermostat Baxi Mago with integrated wi-fi module + adapter kit GTW17 (Opertherm and ON/OFF) For Luna Platinum+, Nuvola Platinum+, Power 32 (models with serial number starting from 180000000 only)	A7724375
	Chronothermostat Baxi Mago with integrated wi-fi + adapter kit GTW16 (Opertherm and ON/OFF) For Luna Duo-tec E, Duo-tec Compact E, Nuvola Duo-tec+, Duo-tec Compact GA (Nuvola Duo-tec+, Duo-tec Compact GA, models with serial number starting from 180000000 only)	7652303
	Chronothermostat Baxi Mago with integrated wi-fi (R-BUS) For Prime	7701201
	WI-FI control panel kit for outdoor boilers For Luna IN Plus, Luna Air (built-in and wall hung models)	NEW A7735720
	Modulating room thermostat with timer For Luna Duo-tec E, Duo-tec Compact E, Prime, Nuvola Duo-tec+, Duo-tec Compact GA	7104336
	Wireless modulating thermostat with timer - it includes wireless transmitter For Luna Duo-tec E, Duo-tec Compact E, Prime, Nuvola Duo-tec+, Duo-tec Compact GA	7105432
	Remote controller and climatic regulator For Luna Duo-tec E, Duo-tec Compact E, Prime, Nuvola Duo-tec+, Duo-tec Compact GA	7114250
	PCB interface for zone control For Luna Duo-tec E, Duo-tec Compact E, Luna Air, Nuvola Duo-tec+, Duo-tec Compact GA	7113502
	Zone controller kit - MLC30.01 (4 to 1) For Luna Duo-tec E, Nuvola Duo-tec+, Duo-tec Compact E, Duo-tec Compact GA	7109320
	Cascade controller - MLC27.20 (included 1 QAD36 SENSOR) For Luna Duo-tec E, Nuvola Duo-tec+, Duo-tec Compact E, Duo-tec Compact GA	7683469
	Mixing controller kit - MLC16.60 (mixed zone controller) (included 1 QAD36 SENSOR) For Luna Duo-tec E, Nuvola Duo-tec+, Duo-tec Compact E, Duo-tec Compact GA	7110415

Outdoor installation accessories

		Code
	Built-in box with door For Luna IN Plus, Luna Air	KHG 71410991
	Frame kit (to match with built-in box with door - code KHG 71410991 - in case of need or to replace Luna3 Comfort IN models) For Luna IN Plus, Luna Air	7225016
	Upper cover for open air wall-mounted installation (it includes flue system kit and outdoor sealing collar) For Luna IN Plus, Luna Air	A7718787
	Upper cover for open air wall-mounted installation (it includes flue system kit and outdoor sealing collar) For Duo-tec Compact E, Duo-tec Compact GA	7702002
	Bottom cover kit For Prime	KA00051
	Bottom cover kit For Luna Duo-tec E	NEW A7727927
	Bottom cover extension kit The bottom cover extension kit is 180 mm high and covers the system connections, the condensate drain pump and the magnetic dirt separator filter to improve the aesthetic of the installed boiler. It has to be placed at the bottom of the boiler to ensure the total protection of the installed accessories can be ordered with the bottom cover kit A7727927. For Luna Duo-tec E	NEW A7726434
	Bottom cover kit For Duo-tec Compact E	NEW A7736183
	Bottom cover extension kit The bottom cover extension kit is 180 mm high and covers the system connections, the condensate drain pump and the magnetic dirt separator filter to improve the aesthetic of the installed boiler. It has to be placed at the bottom of the boiler to ensure the total protection of the installed accessories and can be ordered with the bottom cover kit A7717859. For Duo-tec Compact E	NEW A7727745

Other accessories

		Code
	44 mm spacer For Prime	KA00071
	Polyphosphate batcher For Luna Platinum+, Nuvola Platinum+, Luna Duo-tec E, Duo-tec Compact E, Nuvola Duo-tec+, Duo-tec Compact GA	KHG 71402301
	Polyphosphate recharge (pack of 4) For Luna Platinum+, Nuvola Platinum+, Luna Duo-tec E, Duo-tec Compact E, Nuvola Duo-tec+, Duo-tec Compact GA	KHG 71402431
	Condensate neutralizer kit (for boilers up to 100 kW) For Luna Platinum+, Nuvola Platinum+, Prime, Nuvola Duo-tec+, Duo-tec Compact GA	KHG 71412561

Mixing system/ multi-zones kit THINK+
The MS IN THINK+ allow to control mixing systems with high temperature zones (≤ 80°C) and low temperature zones (≤ 45°C).
Features: • climatic regulation with outdoor sensor to be installed in the boiler (optional) or with remote control panel (supplied as standard with Platinum+ boilers) • anti frost protection • function to prevent pump sticking • the electronics controls the different zones and mixing valves indipendently, communicating with the boiler to control the power output and the desired temperature • compact dimensions • built-in or wall-mounted installation (built-in box - code 7222568 or the wall hung box - code 7222565).

Mixing systems accessories

		Code
	Mixing system kit "MS THINK+" (1HT zone-2LT zones) 2 indipendent mixing zones it is composed of hydraulic separator, control unit and boiler interface, high temperature circulating pump, 2 mixing valves and 2 low temperature circulating pumps For Luna Platinum+, Nuvola Platinum+	7222370
	Mixing system kit "MS THINK+" (1HT zone-1LT zone) it is composed of hydraulic separator, control unit and boiler interface, high temperature circulating pump, mixing valve and low temperature circulating pump For Luna Platinum+, Nuvola Platinum+	7222369
	Universal system kit "RILANCIO+" 3 zones to control 3 direct zones. It is composed of hydraulic separator, control unit and 3 pumps For all gas condensing boilers	7222366
	Universal system kit "RILANCIO+" 2 zones to control 2 direct zones. It is composed of hydraulic separator, control unit and 2 pumps For all gas condensing boilers	7222365

Universal mixing system/multi-zones kit
The universal MS kit allow to control mixing systems with high temperature zones (≤ 80°C) and low temperature zones (≤ 45°C).
Features: • climatic regulation with outdoor sensor to be installed in the boiler (optional) - KHG 71406211 • anti frost protection • function to prevent pump sticking • compact dimensions • built-in or wall-mounted installation (built-in box - code 7222568 or the wall hung box - code 7222565)

Mixing systems accessories

		Code
	Universal mixing system kit (1HT zone-1LT zone) it is composed of hydraulic separator, control unit, high temperature circulating pump, mixing valve and low temperature circulating pump For all gas condensing boilers	7225039
	Universal mixing system kit (1HT zone -2LT zones) it is composed of hydraulic separator, control unit, high temperature circulating pump, mixing valves and 2 low temperature circulating pumps For all gas condensing boilers	7225038
	Universal mixing system kit (2LT zones) it is composed of hydraulic separator, control unit, mixing valve and 2 low temperature zones circulating pumps For all gas condensing boilers	7225040

Mixing systems accessories

		Code
	Built-in box for mixing systems (with closing door) For all mixing systems	7222568
	Wall hung box for mixing systems For all mixing systems	7222565
	Duo-tec kit for HT partage Control panel to transform the mixing system kit that was for Luna HT into a Universal+ system kit	7677165
	Outdoor sensor For Universal MS kit	KHG 71406211

Solar valves

		Code
	Solar valve kit it is composed of thermostatic diverter and thermostatic mixing valves, copper pipes with telescopic nipples, gaskets and G 1/2" mains water valve For Luna Platinum+, Luna Duo-tec E, Duo-tec Compact E, Prime*, Duo-tec Compact GA	7115139
	Solar valve kit "IN" it is composed of thermostatic diverter and thermostatic mixing valves, copper pipes with telescopic nipples, gaskets and G 1/2" mains water valve For Luna IN Plus, Luna Air	7114505

* for Prime boilers, it is necessary to install the sensor supplied with the solar valve

Gas boilers

Non-Erp gas boilers

Technical pages

119	52-53, 55	54	53	51, 56

Luna3 Blue+

- High efficiency circulating pump
- Hydraulic group with flowmeter and electric 3 way valve
- Sanitary pre-heating function
- Connection to Baxi integrated solar systems option
- Digital control panel with wide LCD display
- Built-in climatic regulation (outdoor sensor available as optional)
- Low NOx emissions: class 6 according to EN 15502
- Combination boiler: the product combines the heating only boiler with UB SC tank for DHW production

Hydraulic system
3 way electric diverter valve
Water refrigerated Low NOx burner
Primary exchanger made of copper pipes protected with anticorrosion coating
Stainless steel DHW exchanger
Automatic by-pass
High efficiency pump with automatic air vent
System to prevent pump and diverter valve sticking operating every 24 hours
Heating circuit relief valve set at 3 bar

Thermoregulation system
Two heating temperatures possible ranges: 30/85 °C, 30/45 °C
Built-in climatic regulation (outdoor sensor available as optional)
Remote controller and climatic regulator (supplied as optional)

Control system
Overheat limit thermostat for the water/flue exchanger
Hydraulic pressure switch to prevent boiler's operating in event of low water
Flue thermostat to ensure safe discharge of flue products
Chimney sweeper function
Electronic temperatures control by NTC sensors
Full anti-frost device
Electronic thermometer
Heating circuit pressure gauge

		Combi		Heating only with indirect cylinder
			Open flue	
Product code		180i 7217323	240i 7217324	1.180i / 160L 7224734
Maximum heat input (DHW)	kW	19,4	26,3	-
Maximum heat input (heating)	kW	19,4	26,3	19,4
Minimum heat input	kW	10,6	11,9	10,6
Rated heat output for DHW circuit	kW	17,5	24	-
Useful heat output at rated heat output and high temperature regime* P_4	kW	17,5	24	17,5
Useful heat output at 30% of rated heat output and low temperature regime** P_1	kW	5,2	7,1	5,2
Load profile		XL	XL	XXL
Seasonal space heating energy efficiency class		C	C	C
Water heating energy efficiency class		B	B	B
Seasonal space heating energy efficiency ηs	%	77	77	77
Useful efficiency at rated heat output and high temperature regime* $\eta 4$	%	81,4	81,4	81,4
Useful efficiency at 30% of rated heat output and low temperature regime** $\eta 1$	%	80,7	80,7	80,7
Efficiency Pn (lower calorific value) - average temperature 70 °C	%	90,4	90,4	90,4
Efficiency 30% (lower calorific value) - return temperature 30 °C	%	89,6	89,6	89,6
NOx emissions	mg/kWh	25	25	25
Minimum working temperature	°C	-5	-5	-5
Expansion vessel capacity	l	8	8	8
Heating temperature range	°C	30-85	30-85	30-85
DHW temperature range	°C	35-60	35-60	-
Specific flow (EN 13203-1)	l/min	8,5	11,2	20,4
DHW production ΔT 25°C (1)	l/min	10	13,7	-
Minimum capacity DHW flow rate	l/min	2	2	-
Minimum pressure heating circuit	bar	0,5	0,5	0,5
Minimum pressure DHW circuit	bar	0,15	0,15	-
Maximum pressure heating circuit	bar	3	3	3
Maximum pressure DHW circuit	bar	8	8	-
Flue tube	Ø mm	110	130	110
Maximum flue mass flow rate	kg/s	0,015	0,021	0,015
Minimum flue mass flow rate	kg/s	0,012	0,017	0,012
Maximum flue temperature	°C	100	120	100
Dimensions (h x w x d)	mm	763 x 450 x 345		
Net weight	kg	31	33	29
Gas type		Natural gas/LPG (2)		
Rated power supply	W	60	60	60
Auxiliary electrical power consumption - Full load *elmax*	kW	0,017	0,017	0,017
Auxiliary electrical power - Partial load *elmin*	kW	0,017	0,017	0,017
Auxiliary electrical power - Stand-by P_{SB}	kW	0,003	0,003	0,003
Sound power level, indoor L_{WA}	dB	54	55	54
Grade of protection		IPX5D	IPX5D	IPX5D

* High temperature regime: 60°C return temperature at heater inlet and 80°C flow temperature at heater outlet
** Low temperature: 37°C return temperature (at heater inlet)
(1) without flow restrictor
(2) For operation with LPG use the conversion kit - available as optional

Technical pages

119, 127, 132-133	49-51	52-53, 55	54	53	51, 56

Luna3 Comfort

- Remote control with LCD display supplied with the boiler; it includes room thermostat, heating and sanitary timers functions
- Enhanced heat exchanger made of copper pipes protected with anticorrosion coating
- Brass hydraulic group and flowmeter with turbine (combi models)
- Sanitary pre-heating function
- Connection to Baxi integrated solar systems option. Electronics has been designed to allow the boiler to turn on only when the cylinder temperature is lower than the one requested

Hydraulic system

3 way electric diverter valve [1]
Steel burner
Primary exchanger made of copper pipes protected with anticorrosion coating
Stainless steel sanitary exchanger (combi models)
Automatic by-pass
Low energy pump with automatic air vent
System to prevent pump and 3 way valve sticking operating every 24 hours
Heating circuit relief valve set at 3 bar

Thermoregulation system

Two heating temperatures possible ranges: 30/85°C, 30/45°C
Built-in climatic regulation (outdoor sensor available as optional)
Control of multi-zones system option
Room sensor, heating circuit and sanitary timers included in the control panel

Control system

Overheat limit thermostat for the water/flue exchanger
Hydraulic pressure switch to prevent boiler operating in event of low water
Pressure switch to ensure safe discharge of flue products (fanned flue models)
Flue thermostat to ensure safe discharge of flue products (open flue models)
Electronic temperatures control by NTC sensors
Full anti-frost device
Electronic thermometer
Heating circuit pressure gauge
AFR system, patented by Baxi that allows the efficiency optimization thanks to a perfect inlet air regulation (fanned flue models with dual flue system)

			Combi			Heating only		
			Fanned flue		Open flue	Fanned flue		Open flue
			240 Fi	310 Fi	240 i	1.240 Fi	1.310 Fi	1.240 i
Product code	Natural Gas LPG	CSE	45624358 45624158	45631358 45631158	45224358	45524358	45531358	45124358
Maximum heat input		kW	26,9	33,3	26,3	26,9	33,3	26,3
Minimum heat input		kW	10,6	11,9	10,6	10,6	11,9	10,6
Maximum heat output		kW	25	31	24	25	31	24
Minimum heat output		kW	9,3	10,4	9,3	9,3	10,4	9,3
Maximum efficiency		%	92,9	93,1	91,2	92,9	93,1	91,2
Energetic efficiency (92/42/CEE)			★★★	★★★	★★	★★★	★★★	★★
Efficiency at 30%		%	90,2	90,8	90,29	90,2	90,8	90,29
Minimum working temperature		°C	-5	-5	-5	-5	-5	-5
Expansion vessel/pre-charge		l/bar	8/0,5	10/0,5	8/0,5	8/0,5	10/0,5	8/0,5
Heating system max pressure		bar	3	3	3	3	3	3
Heating temperature range		°C	30-85 30-45	30-85 30-45	30-85 30-45	30-85 30-45	30-85 30-45	30-85 30-45
DHW temperature range		°C	35-60	35-60	35-60	-	-	-
DHW production ΔT 25°C		l/min	14,3	17,8	13,7	-	-	-
Minimum capacity DHW flow rate		l/min	2	2	2	-	-	-
Minimum pressure on DHW circuit		bar	0,15	0,15	0,15	-	-	-
Maximum pressure on DHW circuit		bar	8	8	8	-	-	-
Flue tube		Ø mm	-	-	120	-	-	120
Coaxial flue system Ø 60/100 max length		m	5	4	-	5	4	-
Dual flue system Ø 80 max length		m	40	25	-	40	25	-
Maximum flue mass flow rate		kg/s	0,017	0,018	0,019	0,017	0,018	0,019
Minimum flue mass flow rate		kg/s	0,017	0,019	0,017	0,017	0,019	0,017
Maximum flue temperature		°C	135	145	110	135	145	110
Dimensions (h x w x d)		mm	763 x 450 x 345					
Net weight		kg	38	40	33	36	38	31
Gas type			Natural gas/LPG ▲					
Rated power supply		W	135	165	80	135	165	80
Grade of protection			IPX5D	IPX5D	IPX5D	IPX5D	IPX5D	IPX5D

[1] In the heating only models, the electric motor is available as optional

Heating only models are connectable to indirect cylinders (p. 48)
▲ For operation with LPG use the conversion kit (injectors) available as optional

BAXI

Technical pages

120, 127, 132-133	49-51	52-53, 55	54	53	51, 56

Luna3

- Digital control panel with wide LCD display
- Enhanced heat exchanger
- Brass hydraulic group and flowmeter with turbine (combi models)
- Sanitary pre-heating function
- Connection to Baxi integrated solar systems option

Hydraulic system
3 way diverter valve [1]
Steel burner
Primary exchanger made of copper pipes protected with anticorrosion coating
Stainless steel sanitary exchanger (combi models)
Automatic by-pass
Low energy pump with automatic air vent
System to prevent pump and 3 way valve sticking operating every 24 hours
Heating circuit relief valve set at 3 bar

Thermoregulation system
Two heating temperatures possible ranges: 30/85°C, 30/45°C
Remote controller and climatic regulator option
Built-in climatic regulation (outdoor sensor available as optional)
Control of multi-zones system option

Control system
Overheat limit thermostat for the water/flue exchanger
Hydraulic pressure switch to prevent boiler's operating in event of low water
Pressure switch to ensure safe discharge of flue products (fanned flue models)
Flue thermostat to ensure safe discharge of flue products (open flue models)
Electronic temperatures control by NTC sensors
Full anti-frost device
Electronic thermometer
Heating circuit pressure gauge
AFR system, patented by Baxi that allows the efficiency optimization thanks to a perfect inlet air regulation (fanned flue models with dual flue system)

			Combi				Heating only
			Fanned flue			Open flue	Fanned flue
			240 Fi	280 Fi	310 Fi	240 i	1.310 Fi
Product code	Natural Gas	CSE	45624366	45628366	45631366	45224366	45531366
Maximum heat input		kW	26,9	30,1	33,3	26,3	33,3
Minimum heat input		kW	10,6	11,9	11,9	10,6	11,9
Maximum heat output		kW	25	28	31	24	31
Minimum heat output		kW	9,3	10,4	10,4	9,3	10,4
Maximum efficiency		%	92,9	93,1	93,1	91,2	93,1
Energetic efficiency (92/42/CEE)			★★★	★★★	★★★	★★	★★★
Efficiency at 30%		%	90,2	90,8	90,8	90,29	90,8
Minimum working temperature		°C	-5	-5	-5	-5	-5
Expansion vessel/pre-charge		l/bar	8/0,5	10/0,5	10/0,5	8/0,5	10/0,5
Heating system max pressure		bar	3	3	3	3	3
Heating temperature range		°C	30-85 30-45	30-85 30-45	30-85 30-45	30-85 30-45	30-85 30-45
DHW temperature range		°C	35-60	35-60	35-60	35-60	-
DHW production ΔT 25°C		l/min	14,3	16	17,8	13,7	-
Minimum capacity DHW flow rate		l/min	2	2	2	2	-
Minimum pressure on DHW circuit		bar	0,15	0,15	0,15	0,15	-
Maximum pressure on DHW circuit		bar	8	8	8	8	-
Flue tube		Ø mm	-	-	-	120	-
Coaxial flue system Ø 60/100 max length		m	5	4	4	-	4
Dual flue system Ø 80 max length		m	40	25	25	-	25
Maximum flue mass flow rate		kg/s	0,017	0,017	0,018	0,019	0,018
Minimum flue mass flow rate		kg/s	0,017	0,017	0,019	0,017	0,019
Maximum flue temperature		°C	135	140	145	110	145
Dimensions (h x w x d)		mm	763 x 450 x 345				
Net weight		kg	38	40	40	33	38
Gas type			Natural Gas/LPG ▲				
Rated power supply		W	135	165	165	80	165
Grade of protection			IPX5D	IPX5D	IPX5D	IPX5D	IPX5D

[1] In the heating only models, the electric motor is available as optional

Heating only models are connectable to indirect cylinders (p. 48)
▲ For operation with LPG use the conversion kit (injectors) available as optional

Technical pages

120, 127-128, 132-134	49-51	52-53, 55	54	56

Nuvola3 Comfort

- Remote control with LCD display supplied with the boiler; it includes room thermostat, heating and sanitary timers functions
- High sanitary performances: up to 490 lt in 30 min (ΔT 30°C)
- 60 lt stainless steel cylinder
- Built-in sanitary expansion vessel

Hydraulic system
3 way electric diverter valve
Steel burner
Primary exchanger made of copper pipes protected with anticorrosion coating
60 lt stainless steel cylinder
Automatic by-pass
Low energy pump with automatic air vent
System to prevent pump and 3 way valve sticking operating every 24 hours
Heating circuit relief valve set at 3 bar
Cylinder relief valve set at 8 bar
Built-in sanitary 2 litres expansion vessel
Sanitary recirculation option

Thermoregulation system
Two heating temperatures possible ranges: 30/85 °C, 30/45 °C
Built-in climatic regulation (outdoor sensor available as optional)
Control of multi-zones system option
Room sensor, heating circuit and sanitary timers included in the control panel

Control system
Overheat limit thermostat for the water/flue exchanger
Hydraulic pressure switch to prevent boiler operating in event of low water
Pressure switch to ensure safe discharge of flue products (fanned flue models)
Flue thermostat to ensure safe discharge of flue products (open flue models)
Electronic temperatures control by NTC sensors
Full anti-frost device
Anti-legionella function
Electronic thermometer
AFR system, patented by Baxi that allows the efficiency optimization thanks to a perfect inlet air regulation (fanned flue models with dual flue system)
Heating circuit pressure gauge

			Combi with DHW storage			
			Fanned flue		Open flue	
		240 Fi	280 Fi	320 Fi	240 i	280 i
Product code Natural Gas	CSB	45724358	45728358	45732358	45424358	45428358
Maximum heat input	kW	26,3	30,1	34,5	27,1	31,1
Minimum heat input	kW	11,9	11,9	11,9	11,9	11,9
Maximum heat output	kW	24,4	28	32	24,4	28
Minimum heat output	kW	10,4	10,4	10,4	10,4	10,4
Maximum efficiency	%	92,9	93,1	93,2	90,2	90,6
Energetic efficiency (92/42/CEE)		★★★	★★★	★★★	★★	★★
Efficiency at 30%	%	90,4	90,5	90,5	89,4	89,5
Minimum working temperature	°C	-5	-5	-5	-5	-5
Expansion vessel/pre-charge	l/bar	7,5/0,5	7,5/0,5	7,5/0,5	7,5/0,5	7,5/0,5
Heating system max pressure	bar	3	3	3	3	3
Heating temperature range	°C	30-85 30-45	30-85 30-45	30-85 30-45	30-85 30-45	30-85 30-45
DHW temperature range	°C	35-65	35-65	35-65	35-65	35-65
Cylinder capacity	l	60	60	60	60	60
Cylinder expansion vessel capacity/pre-charge	l/bar	2/3,5	2/3,5	2/3,5	2/3,5	2/3,5
Specific flow according to EN 625	l/min	18,2	19	21,5	18,2	19
DHW production ΔT 25°C (1)	l/min	14	16,1	18,3	14	16,1
DHW production at discharge ΔT 30°C (1)	l/30'	390	450	490	390	450
Maximum pressure on DHW circuit	bar	8	8	8	8	8
Flue tube	Ø mm	-	-	-	140	140
Coaxial flue system Ø 60/100 max length	m	4	4	4	-	-
Dual flue system Ø 80 max length	m	30	30	30	-	-
Maximum flue mass flow rate	kg/s	0,018	0,018	0,022	0,022	0,024
Minimum flue mass flow rate	kg/s	0,017	0,018	0,021	0,021	0,021
Maximum flue temperature	°C	134	142	142	110	115
Dimensions (h x w x d)	mm	950 x 600 x 466				
Net weight	kg	70	70	70	60	60
Gas type		Natural Gas/LPG ▲				
Rated power supply	W	190	190	190	110	110
Grade of protection		IPX5D	IPX5D	IPX5D	IPX5D	IPX5D

(1) Without flow restrictor
▲ For operation with LPG use the conversion kit (injectors) available as optional

BAXI

Technical pages

121, 127, 132-133 | 49-51 | 52-53, 55 | 54 | 51, 56

Ecofour

- Compact dimensions (730x400x299 mm)
- Digital control panel with LCD display
- Brass hydraulic group with electric 3 way valve (Combi models)
- DHW production through stainless steel plate exchanger

Hydraulic system
3 way diverter valve [1]
Steel burner
Primary exchanger made of copper pipes protected with anticorrosion coating
Stainless steel DHW heat exchanger
Automatic by-pass
Low energy pump with automatic air vent
System to prevent pump and diverter 3 way electric valve sticking operating every 24 hours
Heating circuit relief valve set at 3 bar

Thermoregulation system
Two heating temperatures possible ranges: 30/85°C, 30/45°C
Built-in climatic regulation (outdoor sensor available as optional)

Control system
Overheat limit thermostat for the water/flue exchanger
Hydraulic pressure switch to prevent boiler's operating in event of low water
Pressure switch to ensure safe discharge of flue products (fanned flue models)
Flue thermostat to ensure safe discharge of flue products (open flue models)
Electronic temperatures control by NTC sensors
Full anti-frost device
Electronic thermometer
Heating circuit pressure gauge

			Combi		Heating only			
			Fanned flue	Open flue	Fanned flue		Open flue	
			24 F	24	1.24 F	1.14 F	1.24	1.14
Product code	Natural Gas	CSE	46624354	46224354	46524354	46514354	46124354	46114354
Maximum heat input		kW	25,8	26,3	25,8	15,1	26,3	15,4
Minimum heat input		kW	10,6	10,6	10,6	7,1	10,6	7,1
Maximum heat output		kW	24	24	24	14	24	14
Minimum heat output		kW	9,3	9,3	9,3	6,0	9,3	6,0
Maximum efficiency		%	92,93	91,20	92,93	92,50	91,20	90,90
Energetic efficiency (92/42/CEE)			★★★	★★	★★★	★★★	★★	★★
Efficiency at 30%		%	90,37	89,30	90,37	89,80	89,30	88,60
Minimum working temperature		°C	-5	-5	-5	-5	-5	-5
Expansion vessel capacity/pre-charge		l/bar	6/0,5	6/0,5	6/0,5	6/0,5	6/0,5	6/0,5
Heating system max pressure		bar	3	3	3	3	3	3
Heating temperature range		°C	30-85 30-45	30-85 30-45	30-85 30-45	30-85 30-45	30-85 30-45	30-85 30-45
DHW temperature range		°C	35-60	35-60	-	-	-	-
Specific flow according to EN 625		l/min	10.7	10,7	-	-	-	-
DHW production ΔT 25°C		l/min	13,7	13,7	-	-	-	-
Minimum capacity DHW flow rate		l/min	2	2	-	-	-	-
Maximum pressure on DHW circuit		bar	8	8	-	-	-	-
Flue tube		Ø mm	-	120	-	-	120	110
Coaxial flue system Ø 60/100 max length		m	5	-	5	5	-	-
Dual flue system Ø 80 max length		m	30	-	30	30	-	-
Maximum flue mass flow rate		kg/s	0,014	0,020	0,014	0,012	0,020	0,014
Minimum flue mass flow rate		kg/s	0,014	0,018	0,014	0,012	0,018	0,013
Maximum flue temperature		°C	146	110	146	115	110	99
Dimensions (h x w x d)		mm	730 x 400 x 299					
Net weight		kg	33	29	32	31	28	26
Gas type			Natural Gas/LPG ▲					
Grade of protection			IPX5D	IPX5D	IPX5D	IPX5D	IPX5D	IPX5D

Heating only models are connectable to indirect cylinders (p. 48)
▲ For operation with LPG use the conversion kit (injectors) available as optional

[1] For heating only models available as optional

Technical pages

121, 127, 132-133 | 49-51 | 52-53, 55 | 54 | 51, 56

Eco4s

- Compact dimensions (730x400x299 mm)
- Digital control panel with LCD display
- Hydraulic group with electric 3 way valve (Combi models)
- DHW production through stainless steel plate exchanger

Hydraulic system
3 way diverter valve [1]
Steel burner
Primary exchanger made of copper pipes protected with anticorrosion coating
Stainless steel DHW heat exchanger
Automatic by-pass
Low energy pump with automatic air vent
System to prevent pump and diverter 3 way electric valve operating every 24 hours
Heating circuit relief valve set at 3 bar

Thermoregulation system
Two heating temperatures possible ranges: 30/85°C, 30/45°C
Built-in climatic regulation (outdoor sensor available as optional)

Control system
Overheat limit thermostat for the water/flue exchanger
Hydraulic pressure switch to prevent boiler's operating in event of low water
Pressure switch to ensure safe discharge of flue products (fanned flue models)
Flue thermostat to ensure safe discharge of flue products (open flue models)
Electronic temperatures control by NTC sensors
Full anti-frost device
Electronic thermometer
Heating circuit pressure gauge

		Combi				Heating only
		Fanned flue			Open flue	Fanned flue
		24 F	18 F	10 F	24	1.24 F
Product code		7659670	7659669	7659668	7659762	7659666
Maximum heat input	kW	25,8	20	11,3	26,3	25,8
Minimum heat input	kW	10,6	10,6	11,3	10,6	10,6
Maximum heat output	kW	24	18	10	24	24
Minimum heat output	kW	9,3	9,3	10	9,3	9,3
Minimum working temperature	°C	-5	-5	-5	-5	-5
Expansion vessel capacity/pre-charge	l/bar	6/0,5	6/0,5	6/0,5	6/0,5	6/0,5
Maximum capacity of the heating system	l	100	100	100	100	100
Heating system max pressure	bar	3	3	3	3	3
Heating temperature range	°C	30-85 30-45	30-85 30-45	30-85 30-45	30-85 30-45	30-85 30-45
DHW temperature range	°C	35-60	35-60	35-60	35-60	-
Specific flow according to EN 625	l/min	11	11	11	10,7	-
DHW production ΔT 25°C	l/min	13,7	13,7	13,7	13,7	-
Minimum capacity DHW flow rate	l/min	2	2	2	2	-
Maximum pressure on DHW circuit	bar	8	8	8	8	-
Flue tube	Ø mm	-	-	-	120	-
Coaxial flue system Ø 60/100 max length	m	5	5	5	-	5
Dual flue system Ø 80 max length	m	23	23	23	-	23
Maximum flue mass flow rate	kg/s	0,016	0,016	0,016	0,020	0,016
Minimum flue mass flow rate	kg/s	0,016	0,016	0,016	0,018	0,016
Maximum flue temperature	°C	141	141	141	110	141
Dimensions (h x w x d)	mm	730 x 400 x 299				
Net weight	kg	30	30	30	29	29,5
Gas type		Natural Gas/LPG				
Grade of protection		IPX5D	IPX5D	IPX5D	IPX5D	IPX5D

Heating only models are connectable to indirect cylinders (p. 48)

[1] For heating only models available as optional

BAXI

Slim

Technical pages

122, 127-128, 132-134	49-51	52-53, 55	54	56

- Cast iron exchanger
- 60 litres stainless steel cylinder (2.300 Fi)
- 50 litres cylinder (2.230 i, 2.300 i)
- Multifunctional display
- Low energy circulating pump (Fi, i models)
- System to prevent pump sticking operating every 24 hours
- Connection to cylinder option for DHW production (heating only models)
- Compact dimensions

Thermoregulation system

Built-in climatic regulation (outdoor sensor available as optional)
Central heating timer option
DHW timer option (DHW production models)

		Heating only												With DHW storage		
		Fanned flue				Open flue								Fanned flue	Open flue	
		1.230 Fi	1.230FiN	1.300 Fi	1.300 FiN	1.150 i	1.230 i	1.300 i	1.230 iN	1.300 iN	1.400 iN [1]	1.490 iN [1]	1.620 iN [1]	2.300 Fi	2.230 i	2.300 i
Product code	WSB	43523301	43523347	43530301	43530347	43115301	43123301	43130301	43123347	43130347	43140347	43149347	43162347	43730301	43423301	43430301
Maximum heat input	kW	24,5	24,5	33	33	16,5	24,5	33	24,5	33	44,4	54,1	69	33	24,5	33
Minimum heat input	kW	13,5	13,5	17	17	9,5	13,5	17	13,5	17	23	27,5	35	17	13,5	17
Maximum heat output	kW	22,1	22,1	29,7	29,7	14,9	22,1	29,7	22,1	29,7	40	48,7	62,2	29,7	22,1	29,7
Minimum heat output	kW	11,8	11,8	14,9	14,9	8,5	11,8	14,9	11,8	14,9	20,6	24,5	31,6	14,9	11,8	14,9
Maximum efficiency	%	90	90	90,3	90,3	90,3	90,2	90	90,2	90	90,1	90	90,1	90,3	90,2	90
Energetic efficiency (92/42/CEE)		★★	★★	★★	★★	★★	★★	★★	★★	★★	★★	★★	★★	★★	★★	★★
Energetic efficiency 30%	%	89,6	89,6	88,8	88,8	88,2	88,5	88,5	88,5	88,5	88,8	88,4	88,9	88,8	88,5	88,5
Cast irons sections		4	4	5	5	3	4	5	4	5	6	7	9	5	4	5
Cast irons boiler water capacity	l	11,8	11,8	14,6	14,6	9	11,8	14,6	11,8	14,6	17,4	20,2	25,8	14,6	11,8	14,6
Expansion vessel/pre-charge	l/bar	10/1	-	10/1	-	10/1	10/1	10/1	-	-	-	-	-	10/1	10/1	10/1
Heating system max pressure	bar	3	3	3	3	3	3	3	3	3	3	3	3	3	3	3
Heating temperature range	°C	30-85 30-45	30-85 30-45	30-85 30-45	30-85 30-45	30-85 30-45	30-85 30-45	30-85 30-45	30-85 30-45	30-85 30-45	30-85 30-45	30-85 30-45	30-85 30-45	30-85 30-45	30-85 30-45	30-85 30-45
Cylinder temperature regulation	°C	-	-	-	-	-	-	-	-	-	-	-	-	5-65	5-65	5-65
DHW production ΔT 35°C	l/min	-	-	-	-	-	-	-	-	-	-	-	-	12,2	9	12,1
DHW production at discharge ΔT 30°C	l/30'	-	-	-	-	-	-	-	-	-	-	-	-	485	366	475
Maximum pressure on DHW system	bar	-	-	-	-	-	-	-	-	-	-	-	-	8	8	8
Flue tube	Ø mm	-	-	-	-	110	130	140	130	140	160	160	180	-	130	140
Coaxial flue system Ø 60/100 max length	m	5	5	5	5	-	-	-	-	-	-	-	-	5	-	-
Dual flue system Ø 80 max length	m	20	20	20	20	-	-	-	-	-	-	-	-	20	-	-
Dimensions height width depth	mm	850 350 600	850 350 600	850 350 600	850 350 600	850 350 520	850 350 600	850 350 680	850 350 600	850 350 680	850 350 635	850 350 715	850 350 875	850 650 600	850 650 600	850 650 600
Net weight	kg	121	111	144	134	89	113	136	103	126	150	174	224	184	155	176
Gas type		Natural gas/LPG ▲														
Rated power supply	W	170	70	170	70	120	120	120	15	15	15	15	15	170	120	120
Grade of protection		IPX4D	IPX4D	IPX4D	IPX4D	IPX4D	IPX4D	IPX4D	IPX4D	IPX4D	IPX4D	IPX4D	IPX4D	IPX4D	IPX4D	IPX4D

Heating only models are connectable to Slim UB-UB INOX 80/120 lt. (p. 48)
[1] For 1.400 iN - 1.490 iN - 1.620 iN the windproof flue terminal is compulsory
▲ For operation with LPG use the conversion kit (injectors) available as optional

Technical pages
123

Slim HPS

- **Body composed by pre-assembled cast iron elements properly designed to optimize the efficiency**
- Stainless steel step-modulation atmospheric burner and gas valve
- 50 mm fiberglass insulation
- Flue safety thermostat
- User friendly control panel which incorporates full safety features, including control and high limit thermostats, thermometer and burner on/off switch

Easy mounting of cast-iron elements
Weather compensated central (cascade installations)
Connection to an indirect cylinder option
Cascade installation option

						Heating only Open flue	
					1.80	1.99	1.110
Product code					A7114600	A7114601	A7114602
Power output				kW	56-78,7	69,9-98,6	74,7-107,9
Power input				kW	62,2-87,4	77,7-109,5	85,5-120,5
Nominal efficiency				%	90	89,9	89,5
Number of elements					9	11	12
Number of burners					8	10	11
Number of burner injectors							
Water content of the cast-iron body				lt	28	34	37
Maximum pressure in the heating circuit				bar	4	4	4
Natural gas 20 mbar	Burner injectors			Ø	2,95	2,95	2,95
	G20	Flow rate m³/h 15°C 1013 mbar	Design rate (Qn)		9,2	11,6	12,7
		Pressure at injectors	mbar	100%	4,6-9,1	4,7-9,3	4,6-9,3
	Flue temperature			°C	160	144	140
	Flue flow rate at design rate			kg/h	180	287	330
Propane gas 37 mbar	Burner injectors			Ø	1,70	1,70	1,70
	G31	Flow rate m³/h 15°C 1013 mbar	Design rate (Qn)		6,7	8,3	9,1
		Pressure at injectors	mbar	100%	16,1-30,2	16,6-32,7	16,6-34,3

* with antirefouler
Heating only models are connectable to indirect cylinders (p. 48)

Slim EF

- Body composed by pre-assembled cast iron elements properly designed to optimize the efficiency
- No need of electric power supply
- Stainless steel two-stage atmospheric burner and gas valve with pilot burner
- Piezo electric ignition
- Flue safety thermostat
- User friendly control panel which incorporates full safety features, including control and high limit thermostats, thermometer and burner on/off switch

Easy mounting of cast-iron elements
Safe lightening by intermittent pilot ignition

					Heating only Open flue				
					1.22	1.31	1.39	1.49	1.61
Product code					A7116065	A7116066	A7116067	A7116068	A7116069
Power output				kW	22	30,5	39,1	48,8	60,7
Power input				kW	25	34,8	44,8	55	69,2
Nominal efficiency				%	92	92	92	92	92
Number of elements					3	4	5	6	7
Number of burners Number of burner injectors					2	2	3	3	3
Water content of the cast-iron body					10	13	16	19	22
Maximum pressure in the heating circuit				bar	4	4	4	4	4
Natural gas 20 mbar	Pilot burner injectors			Ø	3,15	3,65	3,40	3,90	4,05
	G20	Flow rate m³/h 15°C 1013 mbar	Design rate (Qn)		2,64	3,68	4,73	5,82	7,32
		Pressure at injectors	mbar	100%	9,8	9,6	9,6	9,1	11,5
	Flue temperature			°C	119	118	110	130	141
	Flue flow rate at design rate			kg/h	24,7	34,7	52,2	53,1	59,2
Propane gas 37 mbar	Burner injectors			Ø	1,80	2,10	1,95	2,20	2,45
	G31	Flow rate m³/h 15°C 1013 mbar	Design rate (Qn)		1,97	2,74	3,53	4,34	5,45
		Pressure at injectors	mbar	100%			35		

* with antirefouler
Heating only models are connectable to indirect cylinders (p. 48)

Technical pages

124 49-51 52-53, 55 54 51, 56

Luna3 Comfort and Combi 80 L

Hydraulic connection kit for heating only boilers

KHG 71410701

Hydraulic connection kit Combi - Luna3

KSL 71411051

		Luna3 Comfort		
		1.240 Fi	1.310 Fi	1.240 i
Stainless steel cylinder capacity	l	79	79	79
Cylinder DHW temperature regulation	°C	35/60	35/60	35/60
DHW production ΔT 25°C in continuous	l/min	14,3	17,8	13,7
DHW production ΔT 30°C at discharge	l/30 min	438	520	438
Recovering time of the cylinder ΔT 50°C	min	12	9	12
Maximum pressure DHW system	bar	8	8	8

Technical pages
124

Combi 80 L

- 79 l stainless steel indirect cylinder connectable to Luna3 Comfort (heating only models) - cod. KSL 71408471
- Cylinder temperature sensor included
- Indirect cylinder temperature controlled directly on the boiler's control panel
- Magnesium anode
- 4 l expansions vessel kit available as optional (KSL 71408611)

UB - UB INOX

- 79/123 l indirect cylinder available in stainless steel
- Magnesium anode for anticorrosion protection
- Nipples in the fixing template
- Indirect cylinder temperature controlled directly on the boiler's control panel

Slim UB - Slim UB INOX

- 79/123 l indirect cylinder available in stainless steel
- Magnesium anode for anticorrosion protection
- Nipples in the fixing template
- Indirect cylinder temperature controlled directly on the boiler's control panel

Coaxial flue system for gas boilers

	Code
Coaxial flue tube with terminal Ø 60/100 For all fanned flue gas boilers	KHG 71410181
Coaxial flue tube extension Ø 60/100 L=1000 mm For all fanned flue gas boilers	KHG 71410171
Coaxial flue tube extension Ø 60/100 L=500 mm For all fanned flue gas boilers	KHG 71410391
Starting coaxial 90° bend Ø 60/100 For all fanned flue gas boilers	KHG 71410141
Starting coaxial 90° bend Ø 60/100 with checking profile For all fanned flue gas boilers	KHG 71410411
Coaxial 90° bend Ø 60/100 - additional For all fanned flue gas boilers	KHG 71410151
Coaxial 90° bend Ø 60/100 with checking profile - additional For all fanned flue gas boilers	KHG 71413661
Coaxial 45° bend Ø 60/100 For all fanned flue gas boilers	KHG 71410161
Reduction from Ø 80/125 to Ø 60/100 For all fanned flue gas boilers	KHG 71411941
Coaxial flue tube with terminal Ø 80/125 For all fanned flue gas boilers	KHG 71414061
Coaxial flue tube extension Ø 80/125 L=1000 mm For all fanned flue gas boilers	KHG 71414041
Coaxial 90° bend Ø 80/125 For all fanned flue gas boilers	KHG 71414051
Coaxial condensate collector kit Ø 60/100 (it replaces KHG 714087710) For all fanned flue gas boilers	KHG 71411971
Internal sealing collar Ø 100 For all fanned flue gas boilers	KHG 71401771
Adapter for 45° bend/vertical chimney For all fanned flue gas boilers	KHG 71410191
Vertical chimney terminal for coaxial flue system Ø 60/100 For all fanned flue gas boilers	KHG 71403641
Flat roof tile For all fanned flue gas boilers	KHG 71403671
Pitched roof tile For all fanned flue gas boilers	KHG 71403661

Dual flue system for gas boilers

		Code
	PPS adjustable dual flue system Ø 80 For all fanned flue gas boilers	KHG 71413621
	Painted tube Ø 80 L=1000 mm For all fanned flue gas boilers	KHG 71401831
	Painted tube Ø 80 L=500 mm For all fanned flue gas boilers	KHG 71401821
	Aluminium tube Ø 80 L=1000 mm For all fanned flue gas boilers	KHG 71403861
	90° bend Ø 80 For all fanned flue gas boilers	KHG 71401801
	45° bend Ø 80 For all fanned flue gas boilers	KHG 71401811
	Painted insulated tube Ø 80 L=1000 mm For all fanned flue gas boilers	KHG 71410541
	Painted insulated tube Ø 80 L=500 mm For all fanned flue gas boilers	KHG 71410531
	Insulated bend 90° Ø 80 For all fanned flue gas boilers	KHG 71410511
	Insulated bend 45° Ø 80 For all fanned flue gas boilers	KHG 71410521
	Condensate collector kit For all fanned flue gas boilers	KHG 71405471
	Condensate collector kit - Ø 80 For all fanned flue gas boilers	KHG 71411961
	Vertical condensate collector kit Ø 80 For all fanned flue gas boilers	KHG 71412281
	Air inlet/outlet flue socket kit For all fanned flue gas boilers	KHG 71405041
	Air outlet flue socket kit For all fanned flue gas boilers	KHG 71405031
	Tube Ø 80 centring kit (pack of 5) For all fanned flue gas boilers	KHG 71403741
	Clamp centring kit For all fanned flue gas boilers	KHG 71410611
	Tube Ø 80 supporting bracket (pack of 5) For all fanned flue gas boilers	KHG 71403731

Dual flue system for gas boilers

		Code
	Internal sealing collar Ø 80 For all fanned flue gas boilers	KHG 71401851
	Internal sealing collar Ø 100 For all fanned flue gas boilers	KHG 71401771
	External sealing collar Ø 80 For all fanned flue gas boilers	KHG 71401841
	Dual flue vertical chimney terminal Ø 80/125 For all fanned flue gas boilers	KHG 71403651
	Flat roof tile For all fanned flue gas boilers	KHG 71403671
	Pitched roof tile For all fanned flue gas boilers	KHG 71403661
	Dual flue terminal Ø 80 For all fanned flue gas boilers	KHG 71401041

Special accessories in case of hard weather conditions

		Code
	Horizontal coaxial flue terminal Ø 60/100 for gas boilers For all fanned flue gas boilers	KHG 71413611
	Vertical coaxial flue terminal Ø 60/100 for gas boilers For all fanned flue gas boilers	KUG 71413571
	Windproof flue terminal Ø 160 (for Slim 1.400 iN - 1.490 iN models) For Slim	KHW 71406881
	Windproof flue terminal Ø 180 (for Slim 1.620 iN model) For Slim	KHW 71406891

Replacement kits

		Code
	Universal replacement kit: it includes fittings and flexible stainless steel pipes For Luna3 Blue+, Luna3 Comfort, Luna3, Ecofour, Eco4s	7215673

Installation templates

		Code
	Metal template for Luna3+ open flue models For Luna3 Blue+, Luna3 Comfort, Luna3	KHG 71406181
	Metal template for Luna3+ fanned flue models For Luna3 Comfort	KHG 71406201
	Metal template for storage boilers For Nuvola3 Comfort	KHG 71406011

Hydraulic accessories

		Code
	Magnetic dirt separator filter Not for Nuvola3 Comfort, Floor standing gas boilers	A7711843
	Brass magnetic dirt separator filter Not for Nuvola3 Comfort, Floor standing gas boilers	A7694146
	Hydraulic connection kit for combi boiler For Luna3 Blue+, Luna3 Comfort, Luna3	KHG 71411071
	Hydraulic connection kit for heating only boiler For Luna3 Blue+, Luna3 Comfort, Luna3	KHG 71410701
	Telescopic connection pipes with gas inlet valve For Luna3 Blue+, Luna3 Comfort, Luna3	KHG 71402891
	Mains water valve with filter For Luna3 Blue+, Luna3 Comfort, Luna3, Ecofour, Eco4s	KHG 71402191
	Heating system flow/return valve with filter For Luna3 Blue+, Luna3 Comfort, Luna3, Ecofour, Eco4s	KHG 71402461
	Heating system flow/return valve without filter to be used for Slim with female/female adapter available on the market For Luna3 Blue+, Slim	KHG 71402201
	Expansion vessel (10 lt) For Luna3 Blue+, Luna3 Comfort, Luna3	KHG 71402161
	Pump UPS 15/70 For Luna3 Comfort, Luna3, Slim	KHG 71408521
	Recirculating kit For Nuvola3 Comfort	KHG 71402271
	Additional expansion vessel (2 lt) For Nuvola3 Comfort	KHG 71403441

Hydraulic accessories

		Code
	3 way valve motor For Luna3 Comfort, Luna3	KHG 71410661
	3 way valve motor and hot water temperature sensor to be used in case of heating only boilers Luna3 models for connection to any solar cylinders For Luna3 Comfort, Luna3	KFG 71411191
	Electric 3 way kit for external connection For Ecofour, Eco4s - only heating models	KHG 71409631
	Connection pump kit For Slim	KHW 71408561
	Connection kit to indirect cylinder for boilers > 35 kW For Slim to be connected to Slim UB	KHW 71409681
	Combi 80 L connection kit For Luna3 Comfort, Luna3 to be connected to Combi 80 L	KSL 71411051
	DHW sensor - pump connecting cable For Slim	KHW 71408741

Outdoor installation accessories

		Code
	Upper cover for open flue models For Luna3 Blue+, Luna3 Comfort, Luna3	KHG 71402481

Thermoregulation accessories

		Code
	Outdoor sensor Not for Slim HPS, Slim EF	KHG 71406211
	Chronothermostat Baxi Mago with integrated wi-fi + adapter kit GTW16 (Opertherm and ON/OFF) For Luna3 Blue+ (models with serial number starting from 180000000 only)	OPENTHERM ON/OFF 7652303
	Remote controller and climatic regulator For Luna3 Blue+, Luna3	KHG 71410641
	Remote controller and climatic regulator wireless For Luna3 Blue+, Luna3	KHG 71411471
	Remote controller and climatic regulator For Slim	KHG 71407261
	PCB interface for remote controller For Slim	KHG 71407251
	Digital room thermostat For all gas boilers	7663411
	Room thermostat Not for Slim HPS, Slim EF	KHG 71408691
	Weekly timer and room thermostat magic time plus Not for Slim HPS, Slim EF	KHG 71408671
	PCB interface for zone control For Luna3 Blue+, Luna3 Comfort, Luna3, Nuvola3 Comfort	KHG 71410651
	Hot water temperature sensor For Luna3 Comfort, Luna3	KHG 71406191

Universal mixing system/multi-zones kit
The universal MS kit allow to control mixing systems with high temperature zones (≤ 80°C) and low temperature zones (≤ 45°C).
Features: • climatic regulation with outdoor sensor to be installed in the boiler (optional) - KHG 71406211 • anti frost protection • function to prevent pump sticking • compact dimensions • built-in or wall-mounted installation (built-in box - code 7222568 or the wall hung box - code 7222565).

Mixing systems accessories

		Code
	Universal mixing system kit (1HT zone-1LT zone) it is composed of hydraulic separator, control unit, high temperature circulating pump, mixing valve and low temperature circulating pump For all gas boilers	7225039
	Universal mixing system kit (1HT zone-2LT zones) it is composed of hydraulic separator, control unit, high temperature circulating pump, mixing valves and 2 low temperature circulating pumps For all gas boilers	7225038
	Universal mixing system kit (2LT zones) it is composed of hydraulic separator, control unit, mixing valve and 2 low temperature zones circulating pumps For all gas boilers	7225040
	Universal system kit "RILANCIO+" 3 zones to control 3 direct zones. It is composed of hydraulic separator, control unit and 3 pumps For all gas boilers	7222366
	Universal system kit "RILANCIO+" 2 zones to control 2 direct zones. It is composed of hydraulic separator, control unit and 2 pumps For all gas boilers	7222365

Mixing systems accessories

		Code
	Built-in box for mixing systems (with closing door) For all mixing systems	7222568
	Wall hung box for mixing systems For all mixing systems	7222565

Solar valves

		Code
	Solar valve kit it is composed of thermostatic diverter and thermostatic mixing valves, copper pipes with telescopic nipples, gaskets and G 1/2" mains water valve For Luna3 Blue+, Luna3 Comfort, Luna3	KHG 71412311

Other accessories

		Code
	Bottom cover For Luna3 Blue+, Luna3 Comfort, Luna3	KHG 71407381
	Polyphosphate batcher For all gas boilers	KHG 71402301
	Polyphosphate recharge (pack of 4) For all gas boilers	KHG 71402431
	UB Inox additional expansion vessel (4 litres) For heating only boilers to be connected to UB Inox and UB Slim	KHG 71408541
	Combi additional expansion vessel (4 litres) For Luna3 Comfort, Luna3 to be connected to Combi 80 L	KSL 71408611

Heat pumps

Technical pages 135-136 73 70 69, 74

PBS-i WH2

- Variable frequency compressor, modulation from 30 to 130%, gas R410A
- Maximum energy efficiency
- Heating, cooling and DHW production
- DHW up to 60°, operation with outdooor air temperature from -20°C
- PBS-i system manager ready for heating connection (H version) or for electrical integration (E version)
- Connectable to Baxi Mago for heating and cooling remote control (available as optional)
- Second mixing zone management with additional thermostat
- INCLUDED high efficiency circulating pump, 8l expansion vessel, pressure gauge, flow meter, external probe
- Single-phase and three-phase power supply
- INCLUDED condensation-free system for indoor unit

Legend: PB S - i MR/TR H/E WH2

- PB: Baxi Heat pump
- S: Split
- i: Inverter
- MR/TR: Reversible single/three phase
- H/E: Hydraulic/Electric integration
- WH2: Wall hung

Product code		PBS-i 4,5 MR H WH2 A7696062	PBS-i 6 MR H WH2 A7696063	PBS-i 8 MR H WH2 A7696064	PBS-i 11 MR H WH2 A7696066	PBS-i 16 MR H WH2 A7696067	PBS-i 11 TR H WH2 A7696068	PBS-i 16 TR H WH2 A7696069
Seasonal energy efficiency (1)		A++	A++	A++	A++	A++	A++	A++
Seasonal energy efficiency (2)		A++	A++	A++	A++	A++	A++	A++
Nominal heating capacity (3)	kW	4,60	5,79	8,26	11,39	14,65	11,39	14,65
COP (3)		5,11	4,05	4,27	4,65	4,22	4,65	4,22
Nominal cooling output (4)	kW	3,80	4,69	7,90	11,16	14,46	11,16	14,46
EER (4)		4,28	4,09	3,99	4,75	3,96	4,75	3,96
System water content	l	18	24	32	44	64	44	64
Sound power level - indoor unit (5)	dB(A)	52,9	48,4	53,3	53,3	53,3	53,3	53,3
Sound power level - outdoor unit (6)	dB(A)	61	64,8	66,7	68,8	68,5	68,8	68,5

Product code		PBS-i 4,5 MR E WH2 A7696070	PBS-i 6 MR E WH2 A7696071	PBS-i 8 MR E WH2 A7696072	PBS-i 11 MR E WH2 A7696073	PBS-i 16 MR E WH2 A7696074	PBS-i 11 TR E WH2 A7696075	PBS-i 16 TR E WH2 A7696076
Seasonal energy efficiency (1)		A++	A++	A++	A++	A++	A++	A++
Seasonal energy efficiency (2)		A++	A++	A++	A++	A++	A++	A++
Nominal heating capacity (3)	kW	4,60	5,79	8,26	11,39	14,65	11,39	14,65
COP (3)		5,11	4,05	4,27	4,65	4,22	4,65	4,22
Nominal cooling output (4)	kW	3,80	4,69	7,90	11,16	14,46	11,16	14,46
EER (4)		4,28	4,09	3,99	4,75	3,96	4,75	3,96
System water content	l	18	24	32	44	64	44	64
Integrated electric resistance power		max 2 stages options 2/2+2/2+4	max 2 stages options 2/2+2/2+4	max 2 stages options 2/2+2/2+4	max 2 stages options 2/2+2/2+4	max 2 stages options 2/2+2/2+4	max 2 stages options 3+3/3+6	max 2 stages options 3+3/3+6
Sound power level - indoor unit (5)	dB(A)	52,9	48,4	53,3	53,3	53,3	53,3	53,3
Sound power level - outdoor unit (6)	dB(A)	67	64,8	66,7	68,8	68,5	68,8	68,5

(1) Heating operation energy class: low temperature, average climatic conditions (UE N° 811/2013)
(2) Heating operation energy class: medium temperature, average climatic conditions (UE N° 811/2013)
(3) Outdoor air temperature 7°C - 87% U.R., water temperature 30/35°C - EN 14511
(4) Outdoor air temperature 35°C, water temperature 23/18°C - EN 14511
(5) According to ISO 3741 at: water temperature 47/55°C and outdoor temperature 7°C - 87% U.R.
(6) According to ISO 9614-1 at: water temperature 47/55°C and outdoor air temperature 7°C - 87% U.R.

Buffer tanks for heat pumps are available on pages 61-66

Technical pages 137 73 70 69, 74

PBS-i FS2

- Variable frequency compressor, modulation from 30 to 130%, gas R410A
- Maximum energy efficiency
- Heating, cooling and DHW production
- DHW up to 60°, operation with outdooor air temperature from -20°C
- PBS-i FS System Manager with 177 litres DHW tank
- Connectable to Baxi Mago for heating and cooling remote control (available as optional)
- Second mixing zone management with additional thermostat
- H version prepared for boiler connection in hybrid systems
- E version with included double-phase electrical integration
- INCLUDED high efficiency circulating pump, 8l expansion vessel, pressure gauge, flow meter, external probe
- Single-phase and three-phase power supply

Legend: PB S - i MR/TR H/E FS2

- PB: Baxi Heat pump
- S: Split
- i: Inverter
- MR/TR: Reversible single/three phase
- H/E: Hydraulic/Electric integration
- FS2: Floor standing

Product code		PBS-i 4,5 MR H FS2 A7696048	PBS-i 6 MR H FS2 A7696049	PBS-i 8 MR H FS2 A7696050	PBS-i 11 MR H FS2 A7696051	PBS-i 16 MR H FS2 A7696052	PBS-i 11 TR H FS2 A7696053	PBS-i 16 TR H FS2 A7696054
Seasonal energy efficiency [1]		A++	A++	A++	A++	A++	A++	A++
Seasonal energy efficiency [2]		A L	A L	A L	A L	A L	A L	A L
Nominal heating capacity [3]	kW	4,60	5,82	7,90	11,39	14,65	11,39	14,65
COP [3]		5,11	4,22	4,34	4,65	4,22	4,65	4,22
Nominal cooling output [4]	kW	3,80	4,69	7,90	11,16	14,46	11,16	14,46
EER [4]		4,28	4,09	3,99	4,75	3,96	4,75	3,96
System water content	l	18	24	32	44	64	44	64
Sound power level - indoor unit [5]	dB(A)	49	49	49	48	48	48	48
Sound power level - outdoor unit [6]	dB(A)	61	65	67	69	70	69	70

Product code		PBS-i 4,5 MR E FS2 A7696055	PBS-i 6 MR E FS2 A7696056	PBS-i 8 MR E FS2 A7696057	PBS-i 11 MR E FS2 A7696058	PBS-i 16 MR E FS2 A7696059	PBS-i 11 TR E FS2 A7696060	PBS-i 16 TR E FS2 A7696061
Seasonal energy efficiency [1]		A++	A++	A++	A++	A++	A++	A++
Seasonal energy efficiency [2]		A L	A L	A L	A L	A L	A L	A L
Nominal heating capacity [3]	kW	4,60	5,82	7,90	11,39	14,65	11,39	14,65
COP [3]		5,11	4,22	4,34	4,65	4,22	4,65	4,22
Nominal cooling output [4]	kW	3,80	4,69	7,90	11,16	14,46	11,16	14,46
EER [4]		4,28	4,09	3,99	4,75	3,96	4,75	3,96
System water content	l	18	24	32	44	64	44	64
Integrated electric resistance power		max 2 stages options 3+3	max 2 stages options 3+3	max 2 stages options 3+3	max 2 stages options 3+3	max 2 stages options 3+3	max 2 stages options 3+3/3+6	max 2 stages options 3+3/3+6
Sound power level - indoor unit [5]	dB(A)	49	49	49	48	48	48	48
Sound power level - outdoor unit [6]	dB(A)	61	65	67	69	70	69	70

[1] Heating operation energy class: medium temperature, average climatic conditions (UE N° 811/2013)
[2] DHW production energy class (UE N° 811/2013) - [3] Outdoor air temperature 7°C - 87% U.R., water temperature 30/35°C - EN 14511
[4] Outdoor air temperature 35°C, water temperature 23/18°C - EN 14511 - [5] According to ISO 3741 at: water temperature 47/55°C and outdoor temperature 7°C - 87% U.R.
[6] According to ISO 9614-1 at: water temperature 47/55°C and outdoor air temperature 7°C - 87% U.R.

Buffer tanks for heat pumps are available on pages 61-66

Technical pages
138 73 70 69, 71

Auriga NEW

ErP OK

- **Monobloc system for heating, cooling and DHW prodution**
- Easy to install in different home environments
- Wide operating range: up to -25°C of outdoor temperature in heating mode and 46°C in cooling mode
- **Full control of the DHW: up to 60° DHW temperature production, boiler water temperature control, DHW circulating pump and solar system integration**
- Suitable to radiant floor and fan coil integration
- Integrated management with different systems: boiler integration, solar integration, diverter valve management and secondary circuit pump
- Wide operation ratio DC inverter compressor
- Remote control panel: control of system functions, paramenters programming and check; Integration in BMS system thanks to the Modbus protocol
- Low GWP refrigerant (R32)

Product code		Auriga 5M A7749305	Auriga 7M A7749306	Auriga 9M A7749307	Auriga 12M A7749308	Auriga 16M A7749309	Auriga 12T A7749310	Auriga 16T A7749311
Seasonal energy efficiency [1]		A+++	A+++	A+++	A++	A++	A++	A++
Seasonal energy efficiency [2]		A++	A++	A++	A++	A++	A++	A++
Nominal heating capacity [3]	kW	4,65	6,65	8,60	12,30	16,30	12,30	16,30
COP [3]		5,00	4,94	4,60	4,81	4,45	4,84	4,49
Nominal cooling output [4]	kW	4,60	6,45	8,00	12,20	15,50	12,20	15,50
EER [4]		4,82	4,65	4,16	4,78	4,26	4,83	4,27
System water content	l	20	20	20	40	40	40	40
Dimensions (h x w x d)	mm	945 x 1210 x 402	945 x 1210 x 402	945 x 1210 x 402	1414 x 1404 x 405	1414 x 1404 x 405	1414 x 1404 x 405	1414 x 1404 x 405
Weight	kg	92	92	92	158	158	172	172

[1] Heating operation energy class: low temperature, average climatic conditions (UE N° 811/2013)
[2] Heating operation energy class: medium temperature, average climatic conditions (UE N° 811/2013)
[3] Outdoor air temperature 7°C - 87% U.R., water temperature 30/35°C - EN 14511
[4] Outdoor air temperature 35°C, water temperature 23/18°C - EN 14511

Buffer tanks for heat pumps are available on pages 61-66

Technical pages 139 71

UBHY DC

Bivalent system that consists of tank for DHW production, heat pump, solar integration and system side puffer

ErP OK

- Each model has a tank with doble coil, of which one specific for heat pumps with enhanced exchange surface, and a system side 80 litres puffer which functions as hydraulic separator for both heated and cooled water
- Flexible installation
- Easy and clean installation
- Magnesium anode to ensure internal surface protection against corrosion
- Enamelled vitrified steel tanks to ensure high protection against corrosion
- Insulation made with 70 mm rigid injected polyurethane

Product code		UBHY 300 DC A7702234	UBHY 500 DC A7702235
Capacity	l	270	450
Tecnical buffer capacity	l	80	74
Heat exchangers	n°	2	2
Coil exchange surface	m^2 upper	2,8	14
	m^2 lower	0,9	22
Coil heat exchange	kW[1] upper	4,4	23
	kW[1] lower	1,5	37
Weight	kg	164,5	211,7
Dimensions	mm (hxØ)	1925 x 690	2040 x 790
Class		B	B

[1] Upper coil: inlet coil temperature 60°C, outlet 50°C; inlet tank temperature 10°C, outlet 45°C - according to DIN 4708
Lower coil: inlet coil temperature 80°C, outlet 60°C; inlet tank temperature 10°C, outlet 45°C - according to DIN 4708

Technical pages 140 71

UBHP SC

Tanks dedicated to heat pump DHW production

ErP OK

- Single coil tanks with enhanced exchange surface specific for heat pumps
- Flexible installation
- Easy and clean installation
- Magnesium anode to ensure internal surface protection against corrosion
- Enamelled vitrified steel tanks to ensure high protection against corrosion
- Insulation made with 70 mm injected polyurethane or with removable 100 mm soft injected polyurethane depending on the volume

Product code		UBHP 200 SC A7702216	UBHP 300 SC A7702217	UBHP 500 SC A7702218	UBHP 800 SC* A7702219	UBHP 1000 SC* A7702220	UBHP 1500 SC* A7702221	UBHP 2000 SC* A7702222
Capacity	l	190	263	470	702	900	1300	1900
Heat exchangers	n°	1	1	1	1	1	1	1
Coil exchange surface	m^2	3	4	6	7	8	8	13
Coil heat exchange	kW[1]	14	19	31	38	43	45	68
Weight	kg	85,2	118,9	165,7	216,8	246,6	344,3	543,7
Dimensions	mm (hxØ)	1215 x 640	1615 x 640	1705 x 790	1875 x 990	2205 x 990	2085 x 1200	2470 x 1300
Class		B	B	B	-	-	-	-

[1] Upper coil: inlet coil temperature 60°C, outlet 50°C; inlet tank temperature 10°C, outlet 45°C - according to DIN 4708
* Tanks with capacity higher than 500 l are not subject to energy labelling

Technical pages 141 71

UBHP DC

Tanks dedicated to heat pump DHW production and solar integration

ErP OK

- Tanks with double coil of which one specific for heat pumps with enhanced exchange surface
- Flexible installation
- Easy and clean installation
- Magnesium anode to ensure internal surface protection against corrosion
- Enamelled vitrified steel tanks to ensure high protection against corrosion
- Insulation made with 70 mm injected polyurethane or with removable 100 mm soft injected polyurethane depending on the volume

Product code		UBHP 300 DC A7702228	UBHP 500 DC A7702229	UBHP 800 DC* A7702230	UBHP 1000 DC* A7702231	UBHP 1500 DC* A7702232	UBHP 2000 DC* A7702233
Capacity	l	260	455	702	900	1390	1900
Heat exchangers	n°	2	2	2	2	2	2
Coil exchange surface	m^2 upper	3,7	5,2	5,2	6	6	12
	m^2 lower	1,2	1,8	2,4	3,7	3,7	4,3
Coil heat exchange	kW(1) upper	18,5	27,5	30	35	35	70
	kW(1) lower	29	44	30	88	88	103
Weight	kg	125,9	173,9	246,1	275,6	369,3	571,7
Dimensions	mm (hxØ)	1615 x 640	1705 x 790	1875 x 990	2205 x 990	2185 x 1200	2470 x 1300
Class		B	B	-	-	-	-

(1) Upper coil: inlet coil temperature 60°C, outlet 50°C; inlet tank temperature 10°C, outlet 45°C - according to DIN 4708
Lower coil: inlet coil temperature 80°C, outlet 60°C; inlet tank temperature 10°C, outlet 45°C - according to DIN 4708
* Tanks with capacity higher than 500 l are not subject to energy labelling

Technical pages 142 71

UBHP DC-I NEW

Tanks dedicated to heat pump DHW production and boiler integration

ErP OK

- Tanks with double coil of which one specific for heat pumps with enhanced exchange surface
- Flaxible, easy and clean installation
- Pre-set for integrative electical resistance installation
- Magnesium anode to ensure internal surface protection against corrosion
- Insulation made with 50 mm injected rigid polyurethane

Product code		UBHP 300 DC-I A7735795	UBHP 500 DC-I A7735796
Capacity	l	260	455
Heat exchangers	n°	2	2
Coil exchange surface	m^2 upper	0,7	1
	m^2 lower	3,7	5,2
Coil heat exchange	kW[1] upper	17	24
	kW[1] lower	18,5	27,5
Weight	kg	128	176
Dimensions	mm (hxØ)	1615 x 640	1705 x 790
Class		C	C

[1] Upper coil: inlet coil temperature 60°C, outlet 50°C; inlet tank temperature 10°C, outlet 45°C - according to DIN 4708
Lower coil: inlet coil temperature 80°C, outlet 60°C; inlet tank temperature 10°C, outlet 45°C - according to DIN 4708
* Tanks with capacity higher than 500 l are not subject to energy labelling

Technical pages 143 71

UBPU TC

Multi-energy source thermal storage for DHW production and heating integration

ErP OK

- Tanks with thermal flywheel function and triple coil exchange
- Removable stainless steel DHW production coil
- Flexible installation and possible integration in systems with different energy sources

Product code		UBPU 500 TC A7702224	UBPU 800 TC* A7702225	UBPU 1000 TC* A7702226	UBPU 1500 TC* A7702227
Capacity	l	450	700	905	1385
Heat exchangers	n°	3	3	3	3
DHW exchange surface	m^2	3,38	3,38	4,27	4,87
DHW heat exchange	kW(1)	59	59	74	85
Coil exchange surface	m^2 upper	2	2	2	3
	m^2 lower	2	2,5	3	3,5
Coil heat exchange	kW(1) upper	34	42	42	66
	kW(1) lower	48	63	75	91
Weight	kg	191,7	241,5	286,7	346,9
Dimensions	mm (hxØ)	1680 x 850	1780 x 990	2180 x 990	2110 x 1200
Class		C	-	-	-

(1) Upper coil: inlet coil temperature 60°C, outlet 50°C; inlet tank temperature 10°C, outlet 45°C - according to DIN 4708
* Tanks with capacity higher than 500 l are not subject to energy labelling

Technical pages
144-145 71

UBPU - UBPU PLUS

Buffer tanks for integration on heating and cooling circuits

ErP OK

UBPU 50-100-300 PLUS UBPU 500 UBPU 25

- Buffer tanks for heat pump for hot and cold water storage
- Insulation with 45/50 mm rigid injected polyurethane
- Included hanging brackets for wall hung integration (models up to 100 lt)
- Pre-set for horizontal and vertical installation
- Pre-set for integrative electrical resistance installation

			NEW	NEW	NEW	
		UBPU 25	UBPU 50 PLUS	UBPU 100 PLUS	UBPU 300 PLUS	UBPU 500
Product code		A7687886	A7735792	A7735793	A7735794	A7116703
Capacity	l	24	57	120	300	500
Dimensions	mm	451 x 380	933 x 380	1100 x 500	1560 x 600	1840 x 600
Weight	kg	18	25	35	55	100
Maximum working pressure	bar	6	6	6	6	6
Maximum working temperature	°C	95	95	95	95	95
Insulation		rigid polyurethane				
Insulation thickness	mm	50	50	50	50	50
Heat losses	kWh/24h (ΔT=40°C)	0,46	0,81	2,11	2,11	2,11
Heat transfer coefficient	W/K	0,43	0,75	2,18	2,18	2,18
Standing loss	W	19	34	50	82	129
Class		A	B	B	C	C

Technical pages

146, 148-149	73	70	74	69, 71-72, 74

CSI IN Split E WI-FI

- Only electric integration models ideal for new buildings
- Inverter air-to-water split heat pump
- Remote digital control panel with back-lighted colored LCD display
- 150 litres stainless steel DHW tank with graphite insulation and enhanced coil
- Automatic filling system
- High efficiency circulating pump with wide modulation ratio
- Set for low and medium temperature systems
- Minimum working temperature -15°C*
- 45 litres DHW tank with graphitic insulation Acqua Più: up to 200 litres of DHW capacity (mod. CSI IN Split E 200 WI-FI**)
- Solar circulating group and 15 litres solar expansion vessel (optional)
- WI-FI ready (if the option is available in your country)

		CSI IN Split E WI-FI
Maximum pressure heating circuit	bar	3
Minimum pressure heating circuit	bar	0,5
Maximum pressure DHW circuit	bar	8
Minimum pressure DHW circuit	bar	0,15
DHW expansion vessel capacity	l	8
Heating temperature range	°C	25-55
Cooling temperature range	°C	7-30
DHW temperature range	°C	35-52
Net weight (heat pump not included)	kg	138 (CSI IN Split E 200 WI-FI**) 120 (CSI IN Split E WI-FI)
Dimensions (h x w x d) - system containment case	mm	2200 x 950 x 350
Load profile		L
Efficiency class DHW/heating		A A++

* For temperature lower than -5°C, the anti frost kit (7213615) is suggested.
** Acqua Più 50 DHW tank is supplied with CSI IN Split E 200 WI-FI models.

Product code Product code		CSI IN 6 Split E WI-FI 7708639 CSI IN 6 Split E 200 WI-FI** 7708645	CSI IN 8 Split E WI-FI 7708640 CSI IN 8 Split E 200 WI-FI** 7708646	CSI IN 11 Split E WI-FI 7708641 CSI IN 11 Split E 200 WI-FI** 7708647
Air-to-water split inverter heat pump		AWHP 6 MR	AWHP 8 MR	AWHP 11 MR
Nominal heating capacity (1)	kW	5,82	8,05	11,41
COP (1)		4,22	4,37	4,65
Nominal cooling output (2)	kW	4,69	7,9	11,18
EER (2)		4,09	4,01	4,67
Heat pump net weight	kg	42	75	118
Heat pump dimensions (h x w x d)	mm	630 x 893 x 360	943 x 950 x 417	1350 x 950 x 417

(1) Outdoor air temperature 7°C - 87 % relative humidity and flow temperature 30-35°C - EN14511 - (2) Outdoor air temperature 35°C and flow temperature 23-18°C - EN14511

CSI IN Split E WI-FI models are made of:


control panel


DHW tank Acqua Più 50 (CSI IN Split E 200 WI-FI models)


hydraulic separator with compensation puffer (30 l)


heat pump
AWHP 6 MR (mod. CSI IN 6 Split E WI-FI)
AWHP 8 MR (mod. CSI IN 8 Split E WI-FI)
AWHP 11 MR (mod. CSI IN 11 Split E WI-FI)


DHW tank UB 150 Più (150 l)


outdoor sensor

Technical pages

147-149	73	70	74	69, 71-72, 74

CSI IN Idro E WI-FI

- Only electric integration models ideal for new buildings
- Inverter air-to-water monobloc heat pump
- Remote digital control panel with back-lighted colored LCD display
- 150 litres stainless steel DHW tank with graphite insulation and enhanced coil
- Automatic filling system
- High efficiency circulating pump with wide modulation ratio
- Set for low and medium temperature systems
- Minimum working temperature -15°C*
- 45 litres DHW tank with graphitic insulation Acqua Più: up to 200 litres of DHW capacity (mod. CSI IN Idro E 200 WI-FI**)
- Solar circulating group and 15 litres solar expansion vessel (optional)
- WI-FI ready (if the option is available in your country)

		CSI IN Idro E WI-FI
Maximum pressure heating circuit	bar	3
Minimum pressure heating circuit	bar	0,5
Maximum pressure DHW circuit	bar	8
Minimum pressure DHW circuit	bar	0,15
DHW expansion vessel capacity	l	8
Heating temperature range	°C	25-55
Cooling temperature range	°C	7-30
DHW temperature range	°C	35-52
Net weight (heat pump not included)	kg	138 (CSI IN Idro E 200 WI-FI**) 120 (CSI IN Idro E WI-FI)
Dimensions (h x w x d) - system containment case	mm	2200 x 950 x 350
Load profile		L
Efficiency class DHW/heating		A A+ ***

* For temperature lower than -5°C, the anti frost kit (7213615) is suggested.
** Acqua Più 50 DHW tank is supplied with CSI IN Idro E 200 WI-FI models.
*** Mod. CSI IN 10 Idro E WI-FI, CSI IN 10 Idro E 200 WI-FI heating class A+, DHW class B

Product code Product code		CSI IN 6 Idro E WI-FI 7708633 CSI IN 6 Idro E 200 WI-FI** 7708635	CSI IN 10 Idro E WI-FI 7708634 CSI IN 10 Idro E 200 WI-FI** 7708636
Air to water monobloc inverter heat pump		PBM-i+ 6	PBM-i+ 10
Nominal heating capacity (1)	kW	5,86	9,23
COP (1)		4,03	4,22
Nominal cooling output (2)	kW	4,41	8
EER (2)		4,16	3,48
Heat pump net weight	kg	52	74
Heat pump dimensions (h x w x d)	mm	675 x 919 x 357	882 x 892 x 393

(1) Outdoor air temperature 7°C - 87 % relative humidity and flow temperature 30-35°C - EN14511 - (2) Outdoor air temperature 35°C and flow temperature 23-18°C - EN14511

CSI IN Idro E WI-FI models are made of:

 control panel	 DHW tank Acqua Più 50 (CSI IN Idro E 200 WI-FI models)	 metal mesh water filter G 1" 1/4
 hydraulic separator with compensation puffer (30 l)	 heat pump PBM-i+ 6 (mod. CSI IN 6 Idro E WI-FI) PBM-i+ 10 (mod. CSI IN 10 Idro E WI-FI)	
 DHW tank UB 150 Più (150 l)	 outdoor sensor	

Compulsory accessories

		Code
	Adaption gas fitting from 1/4" 1/2" to 3/8" 5/8" COMPULSORY INSTALLATION FOR PBS-i 4,5/6 WH2 4,5/6, PBS-i 4,5/6 FS2	A7213864
	Metal template with condensate drain pan for the System manager PBS-i WH2 version H COMPULSORY INSTALLATION IN CASE OF COOLING WITH FAN COIL FOR THE SYSTEM MANAGER PBS-i WH2 VERSION H	A7213866
	Metal template with condensate drain pan for the System manager PBS-i WH2 version EM COMPULSORY INSTALLATION IN CASE OF COOLING WITH FAN COIL FOR THE SYSTEM MANAGER PBS-i WH2 VERSION E	A7213865
	Metal mesh water filter G 1 1/4" COMPULSORY INSTALLATION FOR PBS-i WH2, PBS-i FS2	7112589
	Remote control panel Full heat pump functions control; it can be used as thermostat thanks to the INCLUDED outdoor sensor COMPULSORY INSTALLATION FOR AURIGA	**NEW** A7750381

Noise/vibration accessories

		Code
	Anti-vibration dampers For PBS-i WH2, PBS-i FS2, Auriga, CSI IN Split/Idro E WI-FI	LNP 71004010
	Anti-vibration rubber support brackets (600 mm lenght) Stable support from atmospheric events; it allows the noise vibration reduction For PBS-i WH2, PBS-i FS2, CSI IN Split E WI-FI	**NEW** A7694974
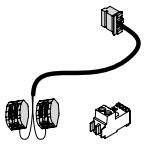	Sound power level reduction for outdoor unit For PBS-i WH2 (not for PBS-i 4,5 WH2 model), PBS-i FS2 (not for PBS-i 4,5 FS2 model), Auriga	A7636899

Thermoregulation accessories

			Code
	Chronothermostat Baxi Mago with integrated wi-fi module (R-BUS) For PBS-i WH2, PBS-i FS2	R-BUS	7701201
	Digital room thermostat For PBS-i WH2, PBS-i FS2, CSI IN Split/Idro E WI-FI	NEW	7663411
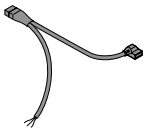	Safety thermostat for floor heating system For PBS-i WH2, PBS-i FS2 (RECOMMENDED FOR RADIANT FLOOR HEATING)		A7651087
	Additional outdoor sensor As the included sensor, it allows to extend the on-board electronics functions For Auriga	NEW	A7750595
	Adjustable room hygrostat For CSI IN Split/Idro E WI-FI		7108086
	Room thermostat with timer/hygrostat For CSI IN Split/Idro E WI-FI		7219362
	ITS wireless temperature sensor with battery (heating) For CSI IN Split/Idro E WI-FI		7223583
	ITHS wireless temperature/humidity sensor with battery (heating and cooling) For CSI IN Split/Idro E WI-FI		7223582

Electrical resistances

		Code
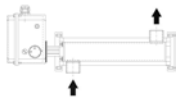	Electrical resistance 3kW 230V Equipped electrical control and protection panel, it integrates and/or replaces the heat pump in the most critical operating conditions or in case of anomaly of the heat pump For Auriga	**NEW** A7750380
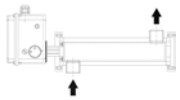	Electrical resistance 4,5kW 400V Equipped electrical control and protection panel, it integrates and/or replaces the heat pump in the most critical operating conditions or in case of anomaly of the heat pump For Auriga	**NEW** A7750385
	Submersible electrical resistance 1,5kW For UBHY DC, UBHP SC, UBHP DC, UBHP DC-I, UBPU TC, UBPU models - not for UBPU PLUS	**NEW** A7735797
	Submersible electrical resistance 2kW For UBHY DC, UBHP SC, UBHP DC, UBHP DC-I, UBPU TC, UBPU models - not for UBPU PLUS	**NEW** A7735798
	Submersible electrical resistance 3kW For UBHY DC, UBHP SC, UBHP DC, UBHP DC-I, UBPU TC, UBPU models - not for UBPU PLUS	**NEW** A7735799
	Electrical resistance manager (compulsory installation in case of electrical resistance) For CSI IN Split/Idro E WI-FI	7674519
	Electrical resistance 2kW for heating integration For CSI IN Split/Idro E WI-FI	7674521
	Electrical resistance 1,5kW for DHW integration For CSI IN Split/Idro E WI-FI	7674522

Other accessories

Code

Solar module CSI IN
For CSI IN Split/Idro E WI-FI

7673092

Product code		Solar module CSI IN 7673092
Supply voltage	V	230
Nominal frequency	Hz	50
Rated power supply	W	120
Weight (empty)	kg	22
Expansion vessel capacity	l	15
Minimum pressure solar expansion vessel	bar	2,5
Maximum pressure solar circuit	bar	6
Maximum water temperature	°C	95

Hydraulic accessories

		Code
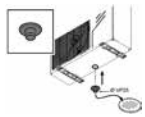	Condensate drain dumpers for outdoor unit AWHP 4,5/6 Condensate collection for outlet pipe connection For PBS-i 4,5/6 WH2, PBS-i 4,5/6 FS2, CSI IN 6 Split E Wi-FI	**NEW** A7727910
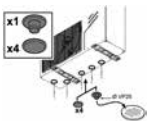	Condensate drain dumpers for outdoor unit AWHP 4,5/6 Condensate collection for outlet pipe connection For PBS-i 8/11/16 WH2, PBS-i 8/11/16 FS2, CSI IN 8/11 Split E Wi-FI	**NEW** A7727908
	3-way valve G 1 1/4" with tank sensor for DHW For PBS-i WH2	A7685541
	DHW tank sensor For PBS-i WH2	A7215528
	FS2 hydraulic connection kit It allows the installation of the following accessories into the unit: manual filling system with non-return valve, 8 l DHW expansion vessel, 8 bar safety valve, primary and DHW circuits taps, metal template For PBS-i FS2	**NEW** A7730594
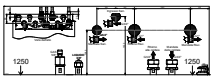	Metal template - FS2 hydraulic connection kit It allows the correct pre-set of the pipes even in the absence of the unit For PBS-i FS2	**NEW** A7744505
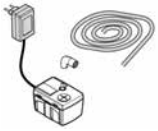	Condense pump For PBS-i FS2	A7687189
	3-way valve G 1 1/4" for DHW Fitted downstream from the heat pump, it switches the water flow from the system to the DHW tank and vice versa, according to the signal received by the heat pump For Auriga	**NEW** A7754874
	CSI IN hot/cold flow switch kit (with insulation) Valve to commute the cold water incoming from the heat pump to the fancoils and the hot water to the radiant floor heating For CSI IN Split/Idro E WI-FI	**NEW** A7727854
	Lower system connection CSI IN Idro/Split WI-FI For CSI IN Split/Idro E WI-FI	7217125
	Metal template CSI IN Idro/Split WI-FI For CSI IN Split/Idro E WI-FI	7217060
	Acqua più 50 50 lt DHW tank: more DHW that can satisfy the needs of residential units up to 150 sqm For CSI IN Split/Idro E WI-FI	**NEW** 7661785

Mixing systems accessories

		Code
	SCB-CF Expansion card kit for integrated heating and cooling management It allows to manage the radiant floor heating and the cooling via fan coil (up to 2 zones) For PBS-i WH2, PBS-i FS2	NEW A7725944
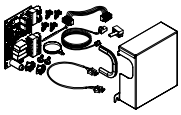	Expansion card kit for WH2 unit for second mixing zone For PBS-i WH2	A7683828
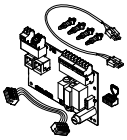	Expansion card kit for FS2 unit for second mixing zone For PBS-i FS2	A7689751
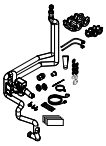	Mixing zone hydraulic kit for FS2 unit (the kit has to be combined with the accessory 7689751) For PBS-i FS2	A7718394
	Zones expansion module CSI IN Idro/Split WI-FI For CSI IN Split/Idro E WI-FI	7213355

Outdoor installation accessories

		Code
	Built-in box For CSI IN Split/Idro E WI-FI	KSL 71412681
	Cover for built-in box (in case of heavy rainy weather) For CSI IN Split/Idro E WI-FI	KSL 71414391
	Technical cabinet For CSI IN Split/Idro E WI-FI	7217055
	Upper cover for technical cabinet For CSI IN Split/Idro E WI-FI	7690617
	Anti frost protection - for cold temperature lower than -5°C (it is made of: anti-frost cartridge, flexible pipe L=150 mm, pipe for anti frost cartidge) For CSI IN Split/Idro E WI-FI	7213615

BAXI

Fan Coil

Technical pages 150 80

IQWH - Wall hung units NEW

- Elegant and compact design
- Easy installation and servising
- Noiseless operation for the maximum comfort
- **Complete comfort control thanks to the INCLUDED infrared remote control**
- INCLUDED temperature control
- Frontal led display
- Adjustable flaps for a pleasant air circulation in the room
- 2 pipe system
- **INCLUDED 3-way valve**
- Anti-cool start function to start the fan with the battery at temperature
- Removable and washable air filter

Models WALL HUNG			IQWH20	IQWH30	IQWH40
Code			A7716554	A7716555	A7716556
	Electrical power supply	V/Ph/Hz	230±10V/1/50	230±10V/1/50	230±10V/1/50
	Rated power supply	W	24	40	50
	Air flow (A/M/B)	m^3/h	492/454/400	825/689/590	862/741/634
Cooling [1]	Power (A/M/B)	kW	2,70/2,59/2,39	2,70/2,59/2,39	4,47/3,98/2,48
	Water flow (A/M/B)	m^3/h	0,48/0,46/0,42	0,67/0,57/0,51	0,77/0,68/0,61
	Water losses (A/M/B)	kPa	31,6/28,6/25,4	56,8/41,2/33,0	41,2/33,5/27,1
Heating [2]	Power (A/M/B)	kW	2,94/2,8/2,58	4,3/3,65/3,09	4,84/4,23/3,62
	Water Flow (A/M/B)	m^3/h	0,51/0,49/0,46	0,73/0,64/0,56	0,84/0,73/0,64
	Water losses (A/M/B)	kPa	32,7/34,9/30,2	51,9/47,5/35,7	36,8/33,8/26,3
Heating [3]	Power (A/M/B)	kW	3,29/3,03/2,63	5,08/4,33/3,77	5,68/4,94/4,24
	Water Flow (A/M/B)	m^3/h	0,48/0,46/0,42	0,67/0,57/0,51	0,77/0,68/0,61
	Water losses (A/M/B)	kPa	37,5/30,3/26,5	61,9/37,9/30,3	43,7/29,7/24,0
Sound pressure level (A/M/B) [4]		dB(A)	30/24/20	37/21/26	39/33/28
Sound power level (A/M/B) [5]		dB(A)	44/42/39	57/51/47	50/46/42
Heat exchanger	Maximum operating pressure	MPa	1,6	1,6	1,6
Machine body	Dimensions (wxhxd)	mm	915x290x230	915x290x230	1072x315x230
	Net weight	kg	13,3	13,3	15,8
Connections	Hydraulic connections (inches)		3/4"	3/4"	3/4"
	Outlet pipe (external diameter)	mm	Ø 20	Ø 20	Ø 20

A: High speed fan; M: Average speed fan; B: Low speed fan.
(1) Cooling mode: inlet air teperature 27°C d.b. /19°C w.b., inlet/outlet water temperature 7°C/12°C.
(2) Heating mode: inlet air teperature 20°C d.b., inlet/outlet water temperature 45/40°C.
(3) Heating mode: inlet air teperature 20°C d.b., inlet/outlet water temperature 50°C (same water flow as in standard cooling mode).
(4) Sound tested in semi-anechoic chamber, according to ISO 3744, 1m distance (conditions as note (2)).
(5) According to ISO 3744 (conditions as note (2)).

Technical pages 151 80 80

IQF - Ceiling/floor units NEW

- Elegant and compact design
- Installation versatility: the units can be ceiling or floor mounted
- High efficiency (DC inverter) and noiseless operation
- 2 pipe system
- Hydraulic connections on the left side (frontal view)
- Ideal for rooms without false ceiling
- INCLUDED condensate drain pan
- Removable and washable air filter

Models CEILING/FLOOR			IQF20	IQF35	IQF45	IQF60	IQF70
Code			A7748929	A7748930	A7748931	A7748932	A7748933
	Electrical power supply	V/Ph/Hz	230±10V/1/50	230±10V/1/50	230±10V/1/50	230±10V/1/50	230±10V/1/50
	Rated power supply	W	17	26	50	96	113
	Air flow (A/M/B)	m^3/h	400/315/190	595/470/340	790/580/410	1190/855/505	1360/1015/685
Cooling [1]	Power (A/M/B)	kW	2,35/1,94/1,19	3,5/2,89/2,22	4,30/3,48/2,71	5,60/4,47/3,14	7,35/6,12/4,57
	Water flow (A/M/B)	m^3/h	0,48/0,34/0,21	0,60/0,50/0,38	0,74/0,60/0,47	0,96/0,77/0,54	1,27/1,05/0,79
	Water losses (A/M/B)	kPa	13,3/9,98/4,59	34,1/24,63/15,39	54,2/36,22/22,78	50,7/33,38/17,73	44,1/33,7/19,41
Heating [2]	Power (A/M/B)	kW	2,60/2,11/1,34	3,50/2,87/2,19	4,30/3,43/2,60	6,00/4,77/3,36	8,05/6,46/4,71
	Water Flow (A/M/B)	m^3/h	0,45/0,37/0,23	0,61/0,48/0,38	0,75/0,60/0,45	1,04/0,83/0,59	1,36/1,12/0,82
	Water losses (A/M/B)	kPa	14,3/10,33/4,5	35,1/24,41/14,82	54,3/36,87/22,32	55,5/37,66/19,27	46,9/31,9/18,16
Heating [3]	Power (A/M/B)	kW	3,45/3,1/1,95	4,89/4,47/3,31	6,02/5,44/4,46	8,29/7,39/5,77	10,69/9,69/7,22
	Water Flow (A/M/B)	m^3/h	0,59/0,27/0,11	0,84/0,39/0,19	1,04/0,47/0,26	1,43/0,64/0,33	1,84/0,83/0,41
	Water losses (A/M/B)	kPa	19,06/4,46/0,97	44,14/10,4/2,97	65,75/14,99/5,07	65,31/14,46/4,49	61,11/14,08/4,05
Sound pressure level (A/M/B) [4]		dB(A)	29/24/20	38/32/25	46/38/30	51/43/31	52/44/33
Sound power level (A/M/B) [5]		dB(A)	43/37/29	52/45/37	59/52/43	65/58/56	64/58/49
Heat exchanger	Maximum operating pressure	MPa	1,6	1,6	1,6	1,6	1,6
Machine body	Dimensions (wxhxd)	mm	1020x495x200	1240x495x200	1240x495x200	1360x495x200	1360x591x200
	Net weight	kg	16,5	19,5	25,5	28,5	32,5
Connections	Hydraulic connections (inches)		3/4"	3/4"	3/4"	3/4"	3/4"
	Outlet pipe (external diameter)	mm	Ø 18,5	Ø 18,5	Ø 18,5	Ø 18,5	Ø 18,5

A: High speed fan; M: Average speed fan; B: Low speed fan.
[1] Cooling mode: inlet air teperature 27°C d.b. /19°C w.b., inlet/outlet water temperature 7°C/12°C.
[2] Heating mode: inlet air teperature 20°C d.b., inlet/outlet water temperature 45/40°C.
[3] Heating mode: inlet air teperature 20°C d.b., inlet/outlet water temperature 50°C (same water flow as in standard cooling mode).
[4] Sound tested in semi-anechoic chamber, according to ISO 3744, 1m distance (conditions as note (2)).
[5] According to ISO 3744 (conditions as note (2)).

Technical pages
152 80 80

IQK - Cassette NEW

- High efficiency and noiseless operation
- Complete comfort control thanks to the INCLUDED remote control
- INCLUDED condensate drain pump
- Primary air intake option: ideal for a healty room
- 2 pipe system
- Anti-cool start function to start the fan with the battery at temperature
- INCLUDED temperature control
- Condensate drain pan for valve connection site (optional) to be ordered and installed for cooling applications

Models CASSETTE			IQK30	IQK40	IQK60	IQK70	IQK110
BODY Code			A7665124	A7665125	A7665127	A7665128	A7665129
PANEL Code			A7665126	A7665126	A7665130	A7665130	A7665130
	Electrical power supply	V/Ph/Hz	230±10V/1/50	230±10V/1/50	230±10V/1/50	230±10V/1/50	230±10V/1/50
	Rated power supply	W	15	43	49	76	128
	Air flow (A/M/B)	m³/h	535/429/322	781/611/494	1229/1020/810	1530/1224/1101	1871/1415/1198
Cooling (1)	Power (A/M/B)	kW	2,98/2,53/2,00	4,20/3,48/3,01	6,12/5,45/4,60	7,84/6,84/6,35	11,19/8,82/7,48
	Water flow (A/M/B)	m³/h	0,53/0,45/0,35	0,75/0,61/0,54	1,10/0,96/0,81	1,43/1,24/1,13	1,96/1,53/1,28
	Water losses (A/M/B)	kPa	10,0/7,0/5,0	12,32/8,62/7,4	21,3/21,3/12,4	22,0/17,0/14,1	36,6/22,7/16,4
Heating (2)	Power (A/M/B)	kW	2,61/2,89/2,24	4,95/3,99/3,26	6,27/6,53/5,43	8,49/8,00/7,35	10,07/10,08/8,68
	Water Flow (A/M/B)	m³/h	0,64/0,54/0,42	0,87/0,70/0,58	1,39/1,20/1,00	1,71/1,45/1,33	2,35/1,86/1,59
	Water losses (A/M/B)	kPa	12,1/8,5/5,3	9,4/8,2/6,1	30,0/22,7/16,3	28,1/20,7/17,4	49,2/31,2/23,3
Heating (3)	Power (A/M/B)	kW	4,01/3,35/2,61	5,76/4,69/3,84	8,62/7,49/6,27	10,86/9,24/8,49	14,92/11,73/10,07
	Water Flow (A/M/B)	m³/h	0,53/0,45/0,35	0,75/0,61/0,54	1,10/0,96/0,81	1,43/1,24/1,13	1,96/1,53/1,28
	Water losses (A/M/B)	kPa	8,2/6,0/3,8	11,41/6,5/5,4	19,1/14,8/10,6	19,9/15,2/12,6	34,3/21,3/15,0
Sound pressure level (A/M/B) (4)		dB(A)	39/33/27	43/38/32	44/40/34	46/42/39	49/43/39
Sound power level (A/M/B) (5)		dB(A)	51/45/39	55/50/44	56/51/45	58/53/50	61/55/50
Heat exchanger	Maximum operating pressure	MPa	1,6	1,6	1,6	1,6	1,6
Machine body	Commercial name of the BODY		IQKB30	IQKB40	IQKB60	IQKB70	IQKB110
	Dimensions (wxhxd)	mm	575x261x575	575x261x575	840x230x840	840x300x840	840x300x840
	Net weight	kg	16,5	16,5	23	27	29,6
Panel	Commercial name of the PANEL		IQKP30-40	IQKP30-40	IQKP60-70-110	IQKP60-70-110	IQKP60-70-110
	Dimensions (wxhxd)	mm	647x50x647	647x50x647	950x45x950	950x45x950	950x45x950
	Net weight	kg	2,5	2,5	6	6	6
Connections	Hydraulic connections (inches)		3/4"	3/4"	3/4"	3/4"	3/4"
	Outlet pipe (external diameter)	mm	Ø 25	Ø 25	Ø 32	Ø 32	Ø 32

A: High speed fan; M: Average speed fan; B: Low speed fan.
(1) Cooling mode: inlet air teperature 27°C d.b. /19°C w.b., inlet/outlet water temperature 7°C/12°C.
(2) Heating mode: inlet air teperature 20°C d.b., inlet/outlet water temperature 45/40°C.
(3) Heating mode: inlet air teperature 20°C d.b., inlet/outlet water temperature 50°C (same water flow as in standard cooling mode).
(4) Sound tested in semi-anechoic chamber, according to ISO 3744, 1m distance (conditions as note (2)).
(5) According to ISO 3744 (conditions as note (2)).

Technical pages
153 80 80

IQD - Duct NEW

- Designed for built-in installation
- Compact dimensions: height 241 mm only
- High efficiency and noiseless operation
- 3-stage exchange battery
- 2 pipe system
- Bottom or back air intake option
- Head pressure adjustment based on the pressure losses of the ventilation ducts
- Outdoor air intake option
- Hydraulic connections on the left side (frontal view)
- **INCLUDED condensate drain pan for valve connection site**
- 4 levels of static pressure (0Pa - 12Pa - 30Pa - 50Pa)

Models DUCT			IQD30	IQD50	IQD60	IQD80	IQD110
Code			A7663846	A7663847	A7663848	A7663849	A7663850
	Electrical power supply	V/Ph/Hz	230±10V/1/50	230±10V/1/50	230±10V/1/50	230±10V/1/50	230±10V/1/50
	Rated power supply	W	23	43	53	65	115
	Air flow (A/M/B)	m³/h	500/442/311	865/626/441	1022/760/544	1452/1038/781	2134/1581/1083
Cooling [1]	Power (A/M/B)	kW	3,12/2,72/2,1	4,46/3,59/2,83	5,85/4,82/3,78	8,02/6,36/5,08	10,79/8,86/6,79
	Water flow (A/M/B)	m³/h	0,60/0,48/0,37	0,79/0,63/0,50	1,05/0,85/0,65	1,42/1,11/0,89	1,93/1,57/1,20
	Water losses (A/M/B)	kPa	23,8/16,4/11,3	16,4/11,3/7,6	31,4/22/14,2	31,6/20,5/13,9	26,3/18,8/12,8
Heating [2]	Power (A/M/B)	kW	3,82/3,08/2,28	5,27/4,21/3,21	6,62/5,38/4	9,15/7,08/5,58	12,62/10,15/7,47
	Water Flow (A/M/B)	m³/h	0,67/0,54/0,41	0,92/0,73/0,57	1,15/0,94/0,71	1,59/1,26/0,98	2,23/1,78/1,31
	Water losses (A/M/B)	kPa	25/17,6/11,3	18,4/12,4/8,1	31,7/22,2/13,6	32,9/21,6/13,9	29,4/20/11,9
Heating [3]	Power (A/M/B)	kW	4,51/3,61/2,71	6,26/4,99/3,81	7,84/6,35/4,81	10,88/8,46/6,68	14,9/11,92/8,89
	Water Flow (A/M/B)	m³/h	0,60/0,37/0,18	0,79/0,63/0,50	1,05/0,85/0,65	1,42/1,11/0,89	1,93/1,57/1,20
	Water losses (A/M/B)	kPa	19,2/12,9/8,5	13,7/9,5/6,3	26,4/18,2/11,4	26,3/16,9/11,5	22,6/16/10,2
Sound pressure level (A/M/B) [4]	0Pa (A/M/B)	dB(A)	36,4/29,5/20,7	44,3/36,3/27,9	46,1/39,0/30,3	44,9/36,1/27,7	48,9/41,8/31,7
	12Pa (A/M/B)	dB(A)	34,0/27,7/19,6	42,9/35,9/27,5	45,0/37,9/29,3	44,1/35,5/27,5	47,4/40,5/30,5
	30Pa (A/M/B)	dB(A)	39,7/29,6/24,1	47,1/37,6/30,2	47,7/39,8/30,7	45,6/37,5/28,0	49,4/41,8/33,5
	50Pa (A/M/B)	dB(A)	44,5/36,4/27,2	48,4/42,3/33,3	49,3/41,8/32,8	48,5/40,5/32,0	52,3/44,8/37,3
Sound power level (A/M/B) [5]	0Pa (A/M/B)	dB(A)	47,4/40,5/31,7	55,3/48,3/39,9	57,1/51,0/42,3	55,9/48,1/39,7	59,9/52,8/43,7
	12Pa (A/M/B)	dB(A)	45,0/39,7/30,6	53,9/47,9/38,5	56,0/49,9/41,3	55,1/47,5/39,5	58,4/52,5/42,5
	30Pa (A/M/B)	dB(A)	50,7/41,6/36,1	58,1/49,6/42,2	58,7/50,8/42,7	56,6/49,5/40,0	60,4/53,8/45,5
	50Pa (A/M/B)	dB(A)	55,5/48,4/39,2	59,4/54,3/45,3	60,3/53,8/44,8	59,2/52,5/44,0	63,3/56,8/49,3
Battery	Maximum operating pressure	MPa	1,6	1,6	1,6	1,6	1,6
Machine body	Dimensions (wxhxd)	mm	841x241x522	941x241x522	1116x241x522	1461x241x522	1856x241x522
	Net weight	kg	19	21	23,7	33	39,2
Connections	Hydraulic connections (inches)		3/4"	3/4"	3/4"	3/4"	3/4"
	Outlet pipe (external diameter)	mm	Ø 24	Ø 24	Ø 24	Ø 24	Ø 24

A: High speed fan; M: Average speed fan; B: Low speed fan.
[1] Cooling mode: inlet air teperature 27°C d.b. /19°C w.b., inlet/outlet water temperature 7°C/12°C.
[2] Heating mode: inlet air teperature 20°C d.b., inlet/outlet water temperature 45/40°C.
[3] Heating mode: inlet air teperature 20°C d.b., inlet/outlet water temperature 50°C (same water flow as in standard cooling mode).
[4] Sound tested in semi-anechoic chamber, according to ISO 3744, 1m distance (conditions as note (2)).
[5] According to ISO 3744 (conditions as note (2)).

Thermoregulation accessories

		Code
	TXW-2000 Digital wall hung control Temperature management, fan speed management, swing function, Eco mode and timer For all IQWH, IQK models	A7698890
	MIR-1200 Infrared remote control For all IQWH, IQK models	A7663859
	TXW-1501 Digital wall hung control Temperature management, fan speed management, swing function, Eco mode and minimum temperature thermostat (not included remote sensor) For all IQF, IQD models	A7734758
	TMW-1000 Wall hung analogical control Temperature and fan speed management For all IQF, IQD models	A7663856
	TDB-2000 Digital control for on-board installation Temperature and fan speed management For all IQF models	A7748934

Hydraulic accessories

		Code
	230V on-off switch with NA auxiliary contact For all IQF, IQK, IQD models	A7739643
	2-way valve 3/4" (it has to be ordered with the switch code A7739643) For all IQF, IQK, IQD models	A7739644
	3-way valve with 4 connections 3/4" and bypass (it has to be ordered with cod. A7739643 switch) For all IQF, IQK, IQD models	A7739646
	Pipe kit IQF 20-35-45-60 (it has to be ordered with cod. A7739646 or A7739644 valve) For IQF 20-35-45-60 models	A7752358
	Pipe kit IQF 70 (it has to be ordered with cod. A7739646 or A7739644 valve) For IQF 70 model	A7752359
	Pipe kit IQK 30-40 (it has to be ordered with cod. A7739646 or A7739644 valve) For IQK 30-40 models	A7739619
	Pipe kit IQK 60-70-110 (it has to be ordered with cod. A7739646 or A7739644 valve) For IQK 60-70-110 models	A7739640
	IQKV30-40 External drain pan For IQK 30-40 models	A7694978
	IQKV60-70-110 External drain pan For IQK 60-70-110 models	A7694979
	Pipe kit IQD (it has to be ordered with cod. A7739646 or A7739644 valve) For IQD models	A7739641

Solar systems

Technical pages 154 89 90-92

Forced collectors

SOL 250-V

- Baxi 2,5 m² vertical solar collector certified Solar Keymark
- For flat and pitched roof
- **INCLUDED protective film:** total overheating protection. The package contains all the main instructions for assembly, transport and maintenance of the solar collector
- **High efficiency:** increased absorption surface by means of a more contained frame
- **Elegant design:** the collector has been developed with a focus on its design. Profile and coatings are the same color as glass, ensuring the integration of the panel on every roof
- **Compression-fittings connections:** brass connections ensure maintenance over time - distance between collectors: 55 mm
- **Up to 10 collectors can be connected in series** (an omega has to be connected after the fifth one)
- **Gross surface:** 2,52 m²
- **Covering:** single solar glass ESG that is pre-stressed, non-ferrous, hail resistant and 3.2 mm thick
- **Absorber:** laser welded aluminium slab (0,4 mm thick) with copper meander pipe (8 mm diameter) and highly selective treatment

SOL 250-O

- Baxi 2,5 m² horizontal solar collector certified Solar Keymark
- For flat and pitched roof
- **INCLUDED protective film:** total overheating protection. The package contains all the main instructions for assembly, transport and maintenance of the solar collector
- **Compression-fittings connections:** brass connections ensure maintenance over time - distance between collectors: 55 mm
- **High efficiency:** increased absorption surface by means of a more contained frame
- **Elegant design:** the collector has been developed with a focus on its design. Profile and coatings are the same color as glass, ensuring the integration of the panel on every roof
- **Up to 10 collectors can be connected in series**
- **Gross surface:** 2,52 m²
- **Covering:** single solar glass ESG that is pre-stressed, non-ferrous, hail resistant and 3.2 mm thick
- **Absorber:** laser welded aluminium slab (0,4 mm thick) with copper meander pipe (8 mm diameter) and highly selective treatment

		SOL 250-V	SOL 250-O
Product code		A7698742	A7713055
Installation		A-frame, on-roof	A-frame, on-roof
Orientation		vertical	horizontal
Connections		compression-fittings	compression-fittings
Gross surface	m²	2,52	2,52
Absorber area	m²	2,35	2,35
Aperture area	m²	2,4	2,4
Collector capacity	l	1,4	1,8
Maximum working pressure	bar	10	10
η_0 - Efficiency (with reference to the absorber surface)	%	80	82
α Heat losses	W/m²K	3,897	3,226
Dimensions (h x w x d)	mm	2191 x 1151 x 70	1151 x 2191 x 70

Solar tanks are available on pages 85-88

Technical pages 154 89 90-92

Forced collectors

SOL 200-V

- Baxi 2,02 m² vertical solar collector certified Solar Keymark
- For flat and pitched roof
- **INCLUDED protective film:** total overheating protection. The package contains all the main instructions for assembly, transport and maintenance of the solar collector
- **Compression-fittings connections:** brass connections ensure maintenance over time - distance between collectors: 55 mm
- **High efficiency:** increased absorption surface by means of a more contained frame
- **Elegant design:** the collector has been developed with a focus on its design. Profile and coatings are the same color as glass, ensuring the integration of the panel on every roof
- Up to 10 collectors can be connected in series
- **Gross surface:** 2,02 m²
- **Covering:** single solar glass ESG that is pre-stressed, non-ferrous, hail resistant and 3.2 mm thick
- **Absorber:** laser welded aluminium slab (0,4 mm thick) with copper meander pipe (8 mm diameter) and highly selective treatment

Product code		SOL 200-V A7713056
Installation		A-frame, on-roof
Orientation		vertical
Connections		compression-fittings
Gross surface	m²	2,02
Absorber area	m²	1,87
Aperture	m²	1,92
Collector capacity	l	1,2
Maximum working pressure	bar	10
η_0 - Efficiency (with reference to the absorber surface)	%	80
α Heat losses	W/m²K	3,914
Dimensions (h x w x d)	mm	1757 x 1151 x 70

Solar tanks are available on pages 85-88

Technical pages 155 89 92

Thermosyphon systems NEW

STS+

- Pre-assembled natural circulation solar systems for DHW production made of solar collector Mediterraneo Slim, solar cylinder, universal frame and hydraulic connection kit
- Mediterraneo Slim solar collector: it is the thinnest panel on the market, that ensures extreme ease of installation and maintenance
- Hydraulic connections with insulated copper pipes and compression fittings connections to the cylinder
- New 150-200-300 l enamelled steel cylinder

		STS+ 150 2.0	STS+ 150 2.5	STS+ 200 2.0	STS+ 200 2.5	STS+ 300 2.0	STS+ 300 2.5
Product code		A7742299	A7743223	A7742320	A7742321	A7749081	A7749082
Installation		A-frame, on roof					
N. of collectors		1	1	1	1	2	2
Single collector external dimensions (h x w x d)	mm	1753 x 1151 x 46	2187 x 1151 x 46	1753 x 1151 x 46	2187 x 1151 x 46	1753 x 1151 x 46	2187 x 1151 x 46
Aperture area	m²	1,92	2,4	1,92	2,4	3,84	4,8
Collector capacity	l	1,4	1,6	1,4	1,6	2,8	3,2
Total primary circuit capacity	l	9,6	9,8	10,6	10,8	22,8	23,2
Cylinder dimensions (Ø x w)	mm	500 x 1309	500 x 1309	580 x 1309	580 x 1309	580 x 2060	580 x 2060
Cylinder capacity	l	157,9	157,9	196,8	196,8	325,5	325,5
Maximum working pressure	bar	8,5	8,5	8,5	8,5	8,5	8,5
α Heat losses	W/m²K	3,86	3,92	3,92	3,86	3,92	3,92
System empty weight	kg	107	107	115	115	190	192

Technical pages 156 92

UBVT SC/DC

Enamelled steel cylinders for boilers and solar systems

UBVT 200
SC/DC

- Tanks range from 200 to 500 l, single (UBVT SC) and double coil (UBVT DC)
- Enamelled vitrified tanks at 850°C to ensure high protection against corrosion
- Insulation made with high-density injected polyurethane foam without CFC
- External rigid case in ABS
- Magnesium anode (2 in models with double coil) to safeguard the internal tank surface against corrosion
- 1500 W, 2300 W and 3000 W electrical resistances with adjustable thermostat available as optional
- Compatible with all BAXI boilers and solar systems

		UBVT 200 SC	UVBT 200 DC	UBVT 300 SC	UBVT 300 DC	UBVT 400 SC	UBVT 400 DC	UBVT 500 DC
Product code		A7110591	A7110592	A7110593	A7110594	A7110595	A7110596	A7682976
Capacity	l	225	225	295	295	400	400	500
Dimensions (h x Ø)	mm	1422,5 x 610	1422,5 x 610	1795,5 x 610	1795,5 x 610	1671,5 x 710	1671,5 x 710	1812 x 811
Weight	kg	95	106	113	128	140	159	205
Maximum DHW pressure	bar	10	10	10	10	10	10	10
Maximum coil pressure	bar	10	10	10	10	10	10	10
Maximum working temperature	°C	95	95	95	95	95	95	95
Insulation		injected polyurethane						
Insulation thickness	mm	50	50	50	50	50	50	50
Heat losses	kWh/24h (ΔT=45°C)	1,8	1,8	2,2	2,2	2,6	2,6	3,0
Heat transfer coefficient	W/K	1,88	1,88	2,29	2,29	2,71	2,71	3,96
Coil exchange surface	m^2 upper	-	0,76	-	1,0	-	1,0	1,0
	m^2 lower	1,2	1,2	1,5	1,5	1,8	1,8	2,5
Coil heat exchange (T inlet 80°C - T DHW 10/45°C)	kW upper	-	24	-	30	-	30	30
	kW lower	36	36	42	42	48	48	63
Coil water content	l upper	-	5,1	-	6,8	-	6,8	6,8
	l lower	8,1	8,1	10,1	10,1	12,1	12,1	16,8
Nominal flow rate	m^3/h upper	-	2	-	2	-	2	2
	m^3/h lower	2	2	2	2	2	2	2
DHW production (T inlet 80°C - T DHW 10/45°)	l/h upper	-	590	-	740	-	740	740
	l/h lower	885	885	1032	1032	1179	1179	1548
Pressure losses	mbar upper	-	40	-	50	-	50	50
	mbar lower	68	68	80	80	92	92	116
NL number (DIN4708)		0,7	0,7	1,3	1,3	2,8	2,8	3,8
Standing loss	W	75	75	92	92	108	108	125
Class		C	C	C	C	C	C	C

Technical pages
156 92

UBSI

Enamelled steel cylinders for DHW production for solar integration (with circulating group)

- Enamelled tank for DHW production, range 300 l and 500 l double coil models
- Solar circulating pump - supplied with the cylinder
- Solar controller - supplied with the cylinder
- 18 l solar expansion vessel - supplied with the cylinder

Product code		UBSI 300 A7110598	UBSI 500 A7680642
Capacity	l	300	500
Dimensions (h x Ø)	mm	1898 x 604	1983 x 804
Weight	kg	129	215
Maximum DHW pressure	bar	10	10
Maximum coil pressure	bar	10	10
Maximum working temperature	°C	96	96
Insulation		injected polyurethane	
Insulation thickness	mm	50	50
Heat losses	kWh/24h (ΔT=45°C)	2,2	3,0
Heat transfer coefficient	W/K	2,29	3,96
Coil exchange surface	m^2 upper	1,0	1,0
	m^2 lower	1,5	2,5
Coil heat exchange (T inlet 80°C - T DHW 10/45°C)	kW upper	30	30
	kW lower	42	63
Coil water content	l upper	6,7	6,7
	l lower	12,1	16,8
Nominal flow rate	m^3/h upper	2,0	2,0
	m^3/h lower	2,0	2,0
DHW production (T inlet 80°C - T DHW 10/45°)	l/h upper	740	740
	l/h lower	1032	1548
Pressure losses	mbar upper	50	50
	mbar lower	80	116
NL number (DIN4708)	-	1,3	3,8
Standing loss	W	92	125
Class		C	C

Technical pages
157

UB DC

Vitrified enamelled steel cylinders for DHW production in centralized systems

- Tanks range from 800 to 2000 l, double coil
- Enamelled vitrified tanks at 850°C to ensure high protection against corrosion
- Insulation made with soft polyurethane 100 mm thickness
- Magnesium anode (2 in models with double coil) to safeguard the internal tank surface against corrosion

Product code		UB 800 DC* A7685877	UB 1000 DC* A7685878	UB 1500 DC* A7685880	UB 2000 DC* A7685881
Capacity	l	800	1000	1500	2000
Dimensions (h x Ø)	mm	1855 x 990	2105 x 990	2185 x 1200	2470 x 1300
Weight	kg	220	265	365	480
Maximum DHW pressure	bar	10	10	8	8
Maximum coil pressure	bar	6	6	6	6
Maximum working temperature	°C	95	95	95	95
Insulation		soft polyurethane			
Insulation thickness	mm	100	100	100	100
Heat losses	kWh/24h (ΔT=40°C)	2,74	3,01	3,89	4,77
Heat transfer coefficient	W/K	2,85	3,15	4,09	4,97
Coil exchange surface	m^2 upper	1,6	1,6	1,8	2,8
	m^2 lower	2,7	3,0	3,4	4,6
Coil heat exchange (T inlet 80°C - T DHW 10/45°C)	kW upper	40	40	47	73
	kW lower	68	75	88	120
Coil water content	l upper	9,3	9,3	10,4	16,9
	l lower	15,2	17,5	19,5	28,1
Nominal flow rate	m^3/h upper	1,7	1,7	2,0	3,1
	m^3/h lower	2,9	3,2	3,8	5,2
DHW production (T inlet 80°C - T DHW 10/45°)	l/h upper	1000	1000	1200	1800
	l/h lower	1700	1800	2200	2900
Pressure losses	mbar upper	52	52	80	233
	mbar lower	236	329	499	1019
NL number (DIN4708)		27	35	45	60

* Tanks with capacity higher than 500 l are not subject to energy labelling

UBTT

Steel cylinders for integration on the heating circuit

- Multi-energy storage tanks with DHW production for domestic and residential applications
- Insulation with soft polyurethane 100 mm thickness or injected foam 50 mm (UBTT 300)

Product code		UBTT 300 A7686146	UBTT 600* A7686147
Dimensions (h x Ø)	mm	1315 x 700	1775 x 950
Total capacity	l	300	600
DHW capacity	l	140	170
Weight	kg	140	290
DHW maximum pressure	bar	6	6
Maximum coil pressure	bar	6	6
Cylinder maximum temperature	°C	95	95
Insulation		injected polyurethane	soft polyurethane
Insulation thickness	mm	50	100
Heat losses	kWh/24h (ΔT=40°C)	1,57	2,52
Heat transfer coefficient	W/K	1,64	2,62
Exchange surface	m^2 lower	1,2	2,5
Coil heat exchange (T inlet 80°C - T DHW 10/45°C)	kW lower	29	63
Coil water content	l	6,0	14,4
Nominal flow rate	m^3/h lower	1,2	2,7
DHW production (T inlet 80°C - T DHW 10/45°C)	m^3/h lower	713	1500
Pressure drop	l/h lower	310	193
NL number (DIN4708)	mbar lower	1,0	2,2
Class		C	-

* Tanks with capacity higher than 500 l are not subject to energy labelling

Solar connections
A-frame and on roof installation (under/through-tile)

COMPRESSION-FITTINGS:
SOL 250-V, SOL 250-O, SOL 200-V hydraulic connections

Compression brass connections (with ogive).

A manual drain air valve is INCLUDED in the 1 and 2 collectors hydraulic connection kits

- code **A7698958:** 1 collector compression-fittings hydraulic connection kit
- code **A7698629:** 2 collectors compression-fittings hydraulic connection kit
- code **A7668058:** Additional collector compression-fittings hydraulic connection kit
- code **A7706314:** Hydraulic connection kit with Omega for installations with n° ≥ 6 collectors

Legend	
1	End cap
2	Elbow G3/4
3	Joining piece
4	Elbow with sensor G3/4 and drain air valve
5	Seal washer
6	Omega connection

	A7698958	A7698629	A7668058	A7706314
1	2	2	-	-
2	1	1	-	4
3	-	2	2	-
4	1	1	-	-
5	2	2	-	4
6	-	-	-	2

Forced collectors hydraulic accessories

		Code
	1 collector hydraulic connection kit For SOL 250-V, SOL 250-O, SOL 200-V	A7698958
	2 collectors hydraulic connection kit For SOL 250-V, SOL 250-O, SOL 200-V	A7698629
	Additional collector hydraulic connection kit For SOL 250-V, SOL 250-O, SOL 200-V	A7668058
	Connection kit with Omega (to be placed between the 5th and the 6th collector of the row) For SOL 250-V, SOL 250-O, SOL 200-V	A7706314
	Thermostatic mixing valve For SOL 250-V, SOL 250-O, SOL 200-V	LNC 71000010
	Solar diverter valve (Rp 3/4") For SOL 250-V, SOL 250-O, SOL 200-V	LNC 71000019
	Diverting valve actuator For SOL 250-V, SOL 250-O, SOL 200-V	LNC 71000020
	Water-glycol soluton (45% gycol/GL10D) - 10 kg tank For all solar collectors	A7705951

Installation accessories: A-frame

		Code
	A-frame set for 1 collector (incl. brackets and rails) For SOL 250-V, SOL 200-V	A7217027
	A-frame set for 2 collectors (incl. brackets and rails) For SOL 250-V, SOL 200-V	A7218884
	A-frame supplementary set for one additional collector (incl. brackets and rails) For SOL 250-V, SOL 200-V	A7217032
	A-frame set for 1 collector (incl. brackets and rails) For SOL 250-O	A7217033
	A-frame set for 2 collectors (incl. brackets and rails) For SOL 250-O	A7705949
	A-frame supplementary set for one additional collector (incl. brackets and rails) For SOL 250-O	A7695248

Installation accessories: on-roof under-tile

		Code
	On-roof under-tile set for 1 collector (incl. brackets and rails) For SOL 250-V, SOL 200-V	A7674434
	On-roof under-tile set for 2 collectors (incl. brackets and rails) For SOL 250-V, SOL 200-V	A7674438
	On-roof under-tile supplementary set for one additional collector (incl. brackets and rails) For SOL 250-V, SOL 200-V	A7674440
	On-roof under-tile set for 1 collector (incl. brackets and rails) For SOL 250-O	A7713200
	On-roof under-tile set for 2 collectors (incl. brackets and rails) For SOL 250-O	A7716208
	On-roof under-tile supplementary set for one additional collector (incl. brackets and rails) For SOL 250-O	A7713201

Installation accessories: on-roof through-tile

		Code
	On-roof through-tile set for 1 collector (incl. brackets and rails) For SOL 250-V, SOL 200-V	A7212852
	On-roof through-tile set for 2 collectors (incl. brackets and rails) For SOL 250-V, SOL 200-V	A7212853
	On-roof through-tile supplementary set for one additional collector (incl. brackets and rails) For SOL 250-V, SOL 200-V	A7212854
	On-roof through-tile set for 1 collector (incl. brackets and rails) For SOL 250-0	A7713198
	On-roof through-tile set for 2 collectors (incl. brackets and rails) For SOL 250-0	A7716207
	On-roof through-tile supplementary set for one additional collector (incl. brackets and rails) For SOL 250-0	A7713199

Accessories for circulation and control

		Code
	High-prevalence solar circulating group+ (max 9 m) For SOL 250-V, SOL 250-0, SOL 200-V Must be combined with a solar control unit with PWM signals	A7221634
	High-prevalence solar circulating group+ (max 14 m) For SOL 250-V, SOL 250-0, SOL 200-V Must be combined with a solar control unit with PWM signals	**NEW** A7743341
	Solar circulating group with controller "Eco+" (sensors included: 1 for tank - 1 for collector) For SOL 250-V, SOL 250-0, SOL 200-V	A7221637
	Solar circulating group without electronics+ For SOL 250-V, SOL 250-0, SOL 200-V Can be combined with Luna Platinum+ models or with a solar control unit	A7221636
	Solar circulating group with controller "Comfort+" (sensors included: 3 for tank - 1 for collector) Not required with Luna Platinum+ For SOL 250-V, SOL 250-0, SOL 200-V	A7677852
	Controller "Eco+" (sensors included: 1 for tank - 1 for collector) For SOL 250-V, SOL 250-0, SOL 200-V	KA00009
	Controller "Comfort+" (sensors included: 1 for tank - 1 for collector) Not required with Luna Platinum+ For SOL 250-V, SOL 250-0, SOL 200-V	A7678817
	Temperature sensor for solar controller For SOL 250-V, SOL 250-0, SOL 200-V	LNC 71000004

Expansion vessel

		Code
	Solar expansion vessel 18 lt For SOL 250-V, SOL 250-O, SOL 200-V	A7685387
	Solar expansion vessel 24 lt For SOL 250-V, SOL 250-O, SOL 200-V	A7685390
	Solar expansion vessel 35 lt (floor standing) For SOL 250-V, SOL 250-O, SOL 200-V	A7685392
	Solar expansion vessel 50 lt (floor standing) For SOL 250-V, SOL 250-O, SOL 200-V	A7685393
	Installation kit for expansion vessel (only for 18 lt and 24 lt expansion vessels) For SOL 250-V, SOL 250-O, SOL 200-V	A7689920

Electrical resistance

		Code
	Electrical resistance 1,5 kW For UBVT, UBSI	LNC 71000036
	Electrical resistance 2,3 kW For UBVT, UBSI	LNC 71000037
	Electrical resistance 3,0 kW For UBVT, UBSI	LNC 71000038
	Electric resistence For STS+ 150, STS+ 200	A7769134
	Electric resistence For STS+ 300	A7769135

STS+ covers

			Code
	STS+ aesthetic cover For STS+ 150, STS+ 200	NEW	A7746913
	STS+ aesthetic cover For STS+ 300	NEW	A7746915

Water heaters

Electric water heaters

ErP OK

- Enamelled steel water tank
- Temperature regulation with external knob
- Ohmic protection system (reduced consumption of the magnesium anode)
- Polyurethane insulation without CFC
- Analogic thermometer (excluding 10-15 litres models)
- Built-in dielectric fitting
- Light indicator
- Grade of protection: IP24

	Product code	Class	Storage volume l	Installation	Rated power supply W	Load profile	Dimensions (h x Ø) mm	Net weight kg
V530	A7110906	C	30	Upright	1.200	S	623 x 338	10,3
V550	A7110907	C	50	Upright	1.200	M	610 x 433	16,5
V580	A7110908	C	80	Upright	1.200	L	854 x 433	21,5
V510	A7110909	C	100	Upright	1.500	L	1018 x 433	25
O580	A7110910	C	80	Horizontal	1.500	M	854 x 433	19,8
O510	A7110911	C	100	Horizontal	1.500	L	1018 x 433	21,4
V580 TD	A7110912	C	80	Thermoelectric upright (right connection)	1.500	L	854 x 433	26
V580 TS	A7110913	C	80	Thermoelectric upright (left connection)	1.500	L	854 x 433	26
V510 TD	A7110914	C	100	Thermoelectric upright (right connection)	1.500	L	1018 x 433	29,5
V510 TS	A7110915	C	100	Thermoelectric upright (left connection)	1.500	L	1018 x 433	29,5

Technical pages
160-161

Sag Blue

Gas storage water heaters

Open flue Models:

- Low Nox emissions: class 6 according to EN 15502
- Piezoelectric ignition
- Porcelain enamel vitrified steel boiler
- Polyurethane insulation without CFC
- Glass wool insulation (mod. 300 T)
- Thermostatic regulation of the temperature
- Magnesium anode
- Wall hung or floor standing installation
- INCLUDED Nozzles for LPG operation

		NEW		NEW		
Product code		Sag 50 Blue A7706460	Sag 80 Blue A7706461	Sag 100 Blue A7706462	Sag 190 T Blue A7706465	Sag 300 T Blue A7706466
Storage volume	l	54	79	97	180	293
Gas type		Nat. Gas/LPG	Nat. Gas/LPG	Nat. Gas/LPG	Nat. Gas/LPG	Nat. Gas
Height	mm	730	945	1110	1674	1679
Diameter	mm	440	440	440	490	650
Weight (empty)	kg	81 (27)	113 (34)	139 (42)	260 (80)	435 (142)
Installation type		wall hung	wall hung	wall hung	floor standing	floor standing
Class		B	B	B	B	B
Load profile		M	M	M	XL	XL

Water heaters are calibrated for methane gas operation

Sag3

Gas storage water heaters - Non ErP models

Open flue Models:

- Piezoelectric ignition
- Porcelain enamel vitrified steel boiler
- Polyurethane insulation without CFC
- Glass wool insulation (mod. 300 T)
- Thermostatic regulation of the temperature
- Magnesium anode
- Wall hung or floor standing installation
- INCLUDED Nozzles for LPG operation

Product code		Sag3 50 A7116717	Sag3 80 A7116718	Sag3 100 A7116719	Sag3 115 T A7116720	Sag3 150 T A7116721	Sag3 190 T A7116722	Sag3 300 T A7116723
Storage volume	l	50	80	100	115	150	190	300
Maximum heat input	kW	4,6	5,3	5.3	8,2	8,2	8,2	23,2
Maximum heat output	kW	3,9	4,4	4,4	6,9	6,9	6,9	19,9
DHW temperature regulation	°C	40-70	40-70	40-70	40-70	40-70	40-70	40-70
DHW flow rate ΔT 45 °C (15-60 °C)	l/h	75	85	85	132	132	132	380
Thermostat		•	•	•	•	•	•	•
Gas type		Nat. Gas/LPG	Nat. Gas/LPG	Nat. Gas/LPG	Nat. Gas/LPG	Nat. Gas/LPG	Nat. Gas/LPG	Nat. Gas/LPG
Flue	ø mm	80	80	80	80	80	80	120
Flue temperature	°C	106	95	95	128	128	128	134
Thermometer		•	•	•	•	•	•	•
Height	mm	755	960	1130	1150	1400	1650	1685
Diameter	mm	440	440	440	490	490	490	650
Weight (empty)	kg	26	33	41	49	65	78	137
Installation type		wall hung	wall hung	wall hung	floor standing	floor standing	floor standing	floor standing
Class		B	B	B	B	B	B	B
Load profile		M	M	M	L	L	L	XL

Water heaters are calibrated for methane gas operation

Technical pages
163

Acquaprojet Blue

Gas instantaneous water heaters

Open flue models

- Low Nox emissions: class 6 according to EN 15502
- Electronic ignition with battery
- Electronic detection of presence of flame
- Ignition minimum flow 2,5 l/min
- Digital control panel with LCD display and temperature visualization

Product code		14i Blue A7698572	14i Blue GL A7698574	11i Blue A7698573	11i Blue GL A7698571
Maximum heat output	kW	24,3	24,3	19,3	19,3
Ignition		electronic with battery	electronic with battery	electronic with battery	electronic with battery
DHW production	l/min	14	14	11	11
Gas type		Nat. Gas*	LPG**	Nat. Gas*	LPG**
Dimensions (h x w x d)	mm	650 x 363 x 248	650 x 363 x 248	592 x 314 x 247	592 x 314 x 247
Weight	kg	14	14	11,8	11,8
Class		A	A	A	A
Load profile		L	L	M	M

* Nozzles for LGP operation available as replacement - 7718549 (mod. 11i Blue), 7718571 (mod. 14i Blue)
** Nozzles for Nat.gas operation available as replacement - 7718548 (mod. 11i Blue GL), 7718570 (mod. 14i Blue GL)

Technical pages
163-164 103-105

Acquaprojet Blue

Gas instantaneous water heaters

Fanned flue models

- Low Nox emissions: class 6 according to EN 15502
- Electronic ignition with cable
- Power electronic linear modulation
- Electronic water temperature control with NTC sensors
- Ignition minimum flow 2 l/min
- Digital control panel with LCD display and temperature visualization
- Ø60 mm flue: refurbishment of existing chimneys solution
- Included integration with Baxi solar systems (mod. 17Fi) - for the other models the solar kit is available as optional

Acquaprojet 17Fi Blue and 17Fi Blue GL will be available from November 2020

		PREVIEW	PREVIEW				
		17Fi Blue	17Fi Blue GL	14Fi Blue	14Fi Blue GL	11Fi Blue	11Fi Blue GL
Product code		A7754406	A7754408	A7702857	A7702859	A7702856	A7702858
Maximum heat output	kW	29,6	29,6	24,3	24,3	19,3	19,3
Ignition		electronic with cable	electronic with cable	electronic with cable	electronic with cable	electronic with cable	electronic with cable
DHW production	l/min	17	17	14	14	11	11
Gas type		Nat. Gas	LPG	Nat. Gas*	LPG**	Nat. Gas*	LPG**
Dimensions (h x w x d)	mm	617 x 385 x 222***	617 x 385 x 222***	617 x 385 x 222***	617 x 385 x 222***	617 x 304 x 222***	617 x 304 x 222***
Weight	kg	17	17	16	16	14	14
Class		A	A	A	A	A	A
Load profile		XL	XL	L	L	M	M

* Nozzles for LPG operation available as replacement - 7719280 (mod. 11Fi Blue), 7719281 (mod. 14Fi Blue)
** Nozzles for Nat.gas operation available as replacement - 7719279 (mod. 11Fi Blue GL), 7719282 (mod. 14Fi Blue GL)
*** 235 mm with knob

Technical pages 165 103 105

Acquaprojet Blue Air PREVIEW

Gas instantaneous water heaters

- Low Nox emissions: class 6 according to EN 15502
- Power electronic linear modulation
- Electronic water temperature control with NTC sensors
- Ignition minimum flow 2 l/min
- High resistance to UV rays and atmospheric agents
- Outdoor installation with included anti-frost resistance (-15°)
- Unnecessary intake and exhaust pipes
- INCLUDED integration with Baxi solar systems (mod. 17Fi) - for the other models the solar kit is available as optional

Product available from November 2020

Product code		17Fi Blue Air A7754413	17Fi Blue Air GL A7754414	14Fi Blue Air A7754411	14Fi Blue Air GL A7754412	11Fi Blue Air A7754409	11Fi Blue Air GL A7754410
Maximum heat output	kW	29,6	29,6	24,3	24,3	19,3	19,3
Ignition		electronic with cable	electronic with cable	electronic with cable	electronic with cable	electronic with cable	electronic with cable
DHW production	l/min	17	17	14	14	11	11
Gas type		Nat. Gas	LPG	Nat. Gas	LPG	Nat. Gas	LPG
Dimensions (h x w x d)	mm	619 x 385 x 229*	619 x 385 x 229*	619 x 385 x 229*	619 x 385 x 229*	619 x 304 x 229*	619 x 304 x 229*
Weight	kg	17	17	15	15	14	14
Class		A	A	A	A	A	A
Load profile		XL	XL	L	L	M	M

* 245 mm with knob

Technical pages 166 105

SPC 200 - SPC 300 - SPC 300 S

- Domestic hot water production up to 65°C with R134a gas
- From -5° to 35°C external air temperature operation
- 1,8 kW integrative steatite electric resistance
- Programmable and remotable control panel
- Model with solar integration or integration with Luna Platinum+ (heating only models) thanks to the included thermostat function (SPC-S)
- Electrical pulse titanium anode
- Floor standing installation

Product code		SPC 200 A7213893	SPC 300 A7112974	SPC 300 S A7112975
Storage volume	l	215	270	260
Heat pump power*	W	1700	1700	1700
Assorbed electrical power**	We	500	500	500
COP**		3,34	3,5	3,27
Integrated electrical resistance power	kW	1,6	1,6	1,6
Maximum working pressure	bar	10	10	10
Voltage supply	V	230	230	230
Air flow	m³/h	320	320	320
Min/max air temperature	°C	-5/+35	-5/+35	-5/+35
R134a refrigerant	kg	1,45	1,45	1,45
Mixed water at 40 °C V40***	l	275	378	383
Sound power level, indoor L_{WA}****	dB(A)	39	39	39
Dimensions (h x Ø)	mm	1690 x 690	2000 x 690	2000 x 690
Empty weight	kg	92	105	123
Class		A+	A+	A+
Load profile		L	XL	XL

* Value for domestic water heating from 15°C to 51°C with air in entrance at 15°C
** Value for air temperature at 15°C and water temperature in entrance at 10°C (EN16147)
*** Maximum DHW volume at 40°C
**** According to EN12102-2013

Technical pages
167

SPC 90

- Domestic hot water production up to 60 °C with R134a gas (75 °C with electrical resistence)
- From +4° to 43°C outdoor air temperature operation
- Compact dimensions
- Easy wall-hung installation
- High efficiency compressor
- Eco-friendly gas type
- Noiseless operation
- Anti legionella function
- Magnesium anode
- Connection diameter for air duct Ø 125 mm
- Connection for PV integration
- Installation kit provided with the water heater including: wall fixing bracket, condensation drain connection, 7 bar safety valve and water connection dielectric joints

Product code		SPC 90 A7677361
Storage volume	l	87
Heat pump power*	W	1005
Assorbed electrical power*	We	210
COP**		2,7
Integrated electrical resistance power	kW	1,2
Maximum working pressure	bar	7
Voltage supply	V	230
Air flow	m³/h	130
Maximum water temperature with R134a gas	°C	60
Maximum water temperature with electric resistance	°C	75
Min/max air temperature	°C	+4/+43
R134a refrigerant	g	530
Mixed water at 40 °C V40***	l	95,5
Sound power level, indoor L_{WA}****	dB(A)	60
Dimensions (h x Ø)	mm	1392 x 550
Empty weight	kg	30,5
Class		A+
Load profile		M

* Value for domestic water heating from 10°C to 55°C with air in entrance at 20°C
** Value for domestic water heating at 10°C with air in entrance at 20°C (EN16147)
*** Maximum DHW volume at 40°C
**** According to EN 12102-2013

Technical pages
168 105

SPC Split NEW

- Split heat pump water heater, wall hung (WH) and floor standing (FS), range from 150 to 300 litres
- DHW production up to 65°C, gas R134a
- External air temperature operation: from -15°C to 42°C
- Noiseless indoor unit ≤ 17 db(A)
- Low tariff function
- Remotable and programmable contol panel
- 1,6 kW (SPC Split 150 WH) and 1,8 kW (SPC Split 200/300 FS) supplementary electrical resistance
- Maximum distance between outdoor unit and water heater 20 m, height difference 10 m
- Anti-legionella function

Product code		SPC Split 150 WH A7736164	SPC Split 200 FS A7736162	SPC Split 300 FS A7736163
Storage volume	l	150	215	270
Heat pump power*	W	1750	1750	1750
Assorbed electrical power*	We	520	530	510
COP*		3,36	3,3	3,42
Operating pressure	bar	10	10	10
Power supply voltage	V	230	230	230
Maximum air flow rate	m^3/h	1300	1300	1300
R134a refrigerant	kg	1,6	1,6	1,6
Mixed water at 40 °C (V40)**	l	205	300	373
Length of the refrigeration connection (min/max)	m	2/20	2/20	2/20
Maximum difference in height on the refrigeration connection	m	10	10	10
DHW tank dimensions (h x Ø)	mm	1273 x 548	1377 x 610	1690 x 610
Net weight of the DHW tank (empty)	kg	63,5	70	82
Setting range for the DHW set point	°C	25/75	38/75	38/75
Sound power level, indoors (L_{WA})	dB	15	17	17
Outdoor unir dimensions (h x w x d)	mm	546 x 838 x 241	546 x 838 x 241	546 x 838 x 241
Outdoor unit weight	kg	33,5	33	33
Limit operating temperatures of the outdoor unit	°C	-15/42	-15/42	-15/42
Sound power level, outdoors (L_{WA})***	dB(A)	59	57	57
Class		A+	A+	A+
Load profile		L	L	XL

* Value obtained with an air temperature of 7°C and a cold water temperature of 10°C, as per EN 16147 standard with a 5 m long refrigeration connection and 0 m difference in height
** The equivalent volume of hot water at 40°C
*** Value obtained at an average air temperature of 20°C with heating from de 10°C to 55°C

Thermoregulation accessories

		Code
	Control panel For Acquaprojet Blue Air - Available from November 2020	NEW A7754415

Coaxial flue system for gas water heaters fanned flue models

		Code
	Coaxial flue tube with terminal Ø 60/100 For Acquaprojet Blue fanned flue models	KHG 71410181
	Coaxial flue tube extension Ø 60/100 L=1000 mm For Acquaprojet Blue fanned flue models	KHG 71410171
	Coaxial flue tube extension Ø 60/100 L=500 mm For Acquaprojet Blue fanned flue models	KHG 71410391
	Starting coaxial 90° bend Ø 60/100 For Acquaprojet Blue fanned flue models	KHG 71410141
	Coaxial 90° bend Ø 60/100 - additional For Acquaprojet Blue fanned flue models	KHG 71410151
	Coaxial 45° bend Ø 60/100 For Acquaprojet Blue fanned flue models	KHG 71410161
	Adjustable vertical coaxial flue system kit Ø 60/100 For Acquaprojet Blue fanned flue models	NEW KHG 71410191
	Internal sealing collar Ø 100 For Acquaprojet Blue fanned flue models	KHG 71401771

Dual flue system for gas water heaters fanned flue models

		Code
	Adjustable dual flue system Ø 80 For Acquaprojet Blue fanned flue models	KHG 71413621
	Vertical flue system B22 type installation For Acquaprojet Blue fanned flue models	KHG 71411181
	Painted tube Ø 80 L=1000 mm For Acquaprojet Blue fanned flue models	KHG 71401831
	Painted tube Ø 80 L=500 mm For Acquaprojet Blue fanned flue models	KHG 71401821
	Aluminium tube Ø 80 L=1000 mm For Acquaprojet Blue fanned flue models	KHG 71403861
	90° bend Ø 80 For Acquaprojet Blue fanned flue models	KHG 71401801
	45° bend Ø 80 For Acquaprojet Blue fanned flue models	KHG 71401811
	Dual flue terminal Ø 80 For Acquaprojet Blue fanned flue models	KHG 71401041
	Internal sealing collar Ø 80 For Acquaprojet Blue fanned flue models	KHG 71401851
	External sealing collar Ø 80 For Acquaprojet Blue fanned flue models	KHG 71401841
	Dual flue vertical chimney terminal Ø 80/125 For Acquaprojet Blue fanned flue models	KHG 71403651
	Reduction from Ø 80(M) / Ø 60(F) For Acquaprojet Blue fanned flue models	KHG 71403711

Dual flue system for gas water heaters fanned flue models

		Code
	Painted tube Ø 60 L=1000 mm For Acquaprojet Blue fanned flue models	KHG 71403701
	Painted tube Ø 60 L=500 mm For Acquaprojet Blue fanned flue models	KHG 71403691
	90° bend Ø 60 For Acquaprojet Blue fanned flue models	KHG 71403681
	45° bend Ø 60 For Acquaprojet Blue fanned flue models	KHG 71403751
	Dual flue terminal Ø 60 For Acquaprojet Blue fanned flue models	KHG 71403721

Other accessories

			Code
	Solar kit Advised installation - it allows constant protection without the need for monitoring or control; to be used in areas with agressive water (Th<14°f) For Acquaprojet Blue Air 11/14Fi	**NEW**	A7731811
	Single connection air - vertical (2 pieces to be ordered to have the complete kit) For SPC 200, SPC 300, SPC 300 S		A7213894
	Current Anode Advised installation - it allows constant protection without the need for monitoring or control; to be used in areas with agressive water (Th<14°f) For SPC Split	**NEW**	A89757752

BAXI

Air conditioning

Technical pages
169

Baxi Astra - Mono Split R32 NEW

- Energy efficiency class A++ in cooling and class A+ in heating
- A totally new design, elegant and minimal thaks to its white matt surface
- R32 refrigerant gas, with a lower environmental impact and higher performance
- Bottom removable cover for pipes connection
- Very low noise (up to 20 dB (A) for the indoor unit)
- Enhanced operating limits (operation from -15 °C up to +52 °C)
- Installation versatility, possibility to connect the indoor unit from the back, from the right or from the left
- Double keyboard remote control to ensure the maximum ease of use
- Remote control via App Air Connect - WI-FI module (USB stick) available as optional (see page 10)*

Legend:

Outdoor unit: LS G T 25 - S
- G: R32 gas
- T: Outdoor unit
- 25: kW
- S: Mono Split

Indoor unit: JS G N W 25
- G: R32 gas
- N: Indoor unit
- W: Wall hung
- 25: kW

MONO Split models		9.000 Btu/h	12.000 Btu/h	18.000 Btu/h	24.000 Btu/h
Energy class		A++ in cooling A+ in heating	A++ in cooling A+ in heating	A++ in cooling A+ in heating	A++ in cooling A+ in heating
SEER		6,5	6,1	6,5	6,4
SCOP		4,2	4,2	4	4,1
Rated cooling capacity	kW	2,55	3,60	5,30	7,03
Rated heating capacity	kW	2,65	3,70	5,40	7,05
OUTDOOR Unit		LSGT25-S	LSGT35-S	LSGT50-S	LSGT70-S
Product code		A7680766	A7680768	A7690471	A7690473
Dimensions (w x h x d)	mm	720 x 540 x 260	720 x 540 x 260	802 x 535 x 298	900 x 681 x 343
Weight	kg	27	27	35	45
Sound power level	dB(A)	60	58	62	64
INDOOR unit		JSGNW25	JSGNW35	JSGNW50	JSGNW70
Product code		A7743245	A7743246	A7743247	A7743248
Dimensions (w x h x d)	mm	792 x 292 x 201	792 x 292 x 201	940 x 316 x 224	1132 x 330 x 232
Weight	kg	8	8	12	15
Sound power level	dB(A)	53	52	58	60

* If the option is available in your country

Technical pages
170

Baxi Astra - Multi Split R32 NEW

- Energy efficiency class A++ in cooling and class A+ in heating
- A totally new design, elegant and minimal thaks to its white matt surface
- R32 refrigerant gas, with a lower environmental impact and higher performance
- Installation versatility: 2x1, 3x1, 4x1 and 5x1 R32 outdoor units can be combined with the same Mono Split indoor units of the Baxi Moonlight range
- Bottom removable cover for pipes connection
- Very low noise (up to 20 dB (A) for the indoor unit)
- Enhanced operating limits (operation from -15 °C up to +52 °C)
- Possibility to connect the indoor unit from the back, from the right or from the left
- Double keyboard remote control to ensure the maximum ease of use
- Remote control via App Air Connect - WI-FI module (USB stick) available as optional (see page 10)*

Legend:

Outdoor unit: LS G T 50 - 2M 3M 4M 5M
- G: R32 gas
- T: Outdoor unit
- 50: kW
- 2M: 2x1; 3M: 3x1; 4M: 4x1; 5M: 5x1

Indoor unit: JS G N W 20
- G: R32 gas
- N: Indoor unit
- W: Wall hung
- 20: kW

MULTI Split models		14.000 Btu/h (2x1)	18.000 Btu/h (2x1)	21.000 Btu/h (3x1)	27.000 Btu/h (3x1)	36.000 Btu/h (4x1)	42.000 Btu/h (5x1)
OUTDOOR Unit		LSGT40-2M	LSGT50-2M	LSGT60-3M	LSGT70-3M	LSGT100-4M	LSGT125-5M
Product code		A7706185	A7690481	A7706186	A7690482	A7711422	A7711423
Energy class		A++ in cooling A+ in heating	A++ in cooling A+ in heating	A++ in cooling A+ in heating	A++ in cooling A+ in heating	A++ in cooling A+ in heating	A++ in cooling A+ in heating
SEER		6,1	7,0	6,5	6,3	6,1	6,1
SCOP		4,0	4,0	4,3	4,0	4,1	4,1
Rated cooling capacity	kW	4,1	5,3	6,2	7,9	10,5	12
Rated heating capacity	kW	4,8	5,6	6,6	8,2	11	13
Dimensions (w x h x d)	mm	800 x 545 x 315	800 x 545 x 315	834 x 655 x 328	834 x 655 x 328	985 x 808 x 395	985 x 808 x 395
Weight	kg	34	36	44	46	74	75
Sound power level	dB(A)	61	62	65	65	68	68

		7.000 Btu/h	9.000 Btu/h	12.000 Btu/h	18.000 Btu/h
INDOOR Unit		JSGNW20	JSGNW25	JSGNW35	JSGNW50
Product code		A7743244	A7743245	A7743246	A7743247
Dimensions (w x h x d)	mm	792 x 292 x 201	792 x 292 x 201	792 x 292 x 201	940 x 316 x 224
Weight	kg	8	8	8	12
12	dB(A)	52	53	52	58

* If the option is available in your country

BAXI

Technical section

Technical drawings
Graphs
Flue systems

Condensing gas boilers

Luna Platinum+
24 GA, 33 GA,
1.12 GA, 1.18 GA,
1.24 GA, 1.32 GA

MR Heating system flow G 3/4"
US DHW outlet G 1/2"
(for heating only models;
tank flow G 3/4")
GAS Gas inlet G 3/4"
ES Mains water G 1/2"
RR Heating system return G 3/4"
SC Condensing trap possible to
connect on a pipe Ø 22
A Boiler hanging points.
Distance between hanging
points: 298 mm
B Distance between hanging
points and hydraulic connections

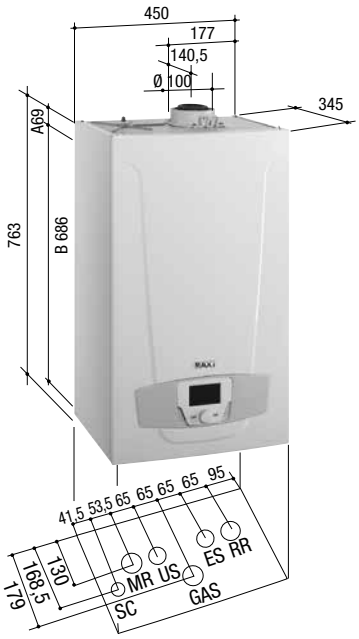

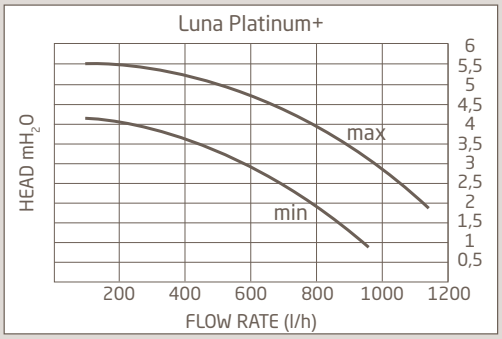

Luna Duo-tec E
24, 28, 33
1.12, 1.24, 1.28

MR Heating system flow G 3/4"
US DHW outlet G 1/2"
(for heating only models storage;
tank flow G 3/4")
GAS Gas inlet G 3/4"
ES Mains water G 1/2"
RR Heating system return G 3/4"
SC Condensing trap possible to
connect on a pipe Ø 22
A Boiler hanging points.
Distance between hanging
points: 298 mm
B Distance between hanging
points and hydraulic connections

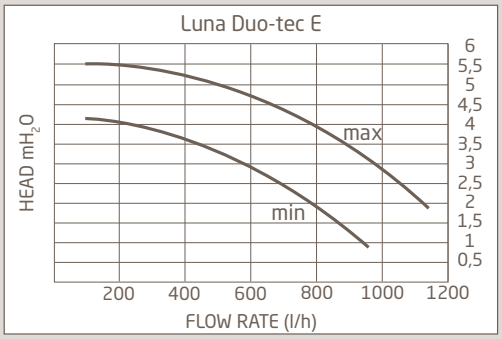

Condensing gas boilers

Duo-tec Compact E
24, 28

MR Heating system flow G 3/4"
US DHW outlet G 1/2"
GAS Gas inlet G 3/4"
ES Mains water G 1/2"
RR Heating system return G 3/4"
SC Condensing trap possible to connect on a pipe Ø 22
A Boiler hanging points. Distance between hanging points: 246 mm
B Distance between hanging points and hydraulic connections

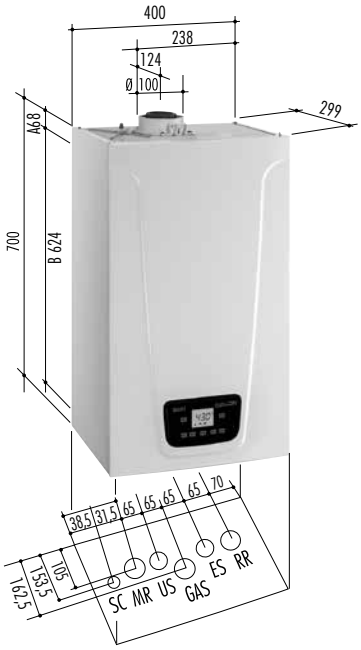

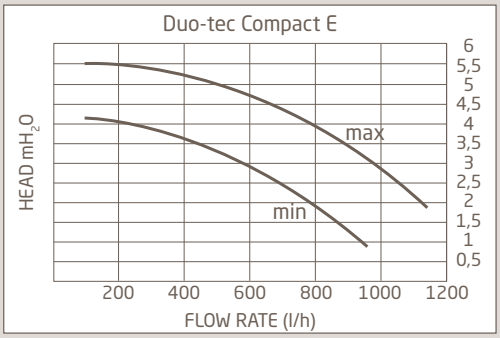

Prime
24, 26, 28, 30, 1.24

MR Heating system flow G 3/4"
US DHW outlet G 1/2"
GAS Gas inlet G 3/4"
ES Mains water G 1/2"
RR Heating system return G 3/4"
SC Condensing trap possible to connect on a pipe Ø 22

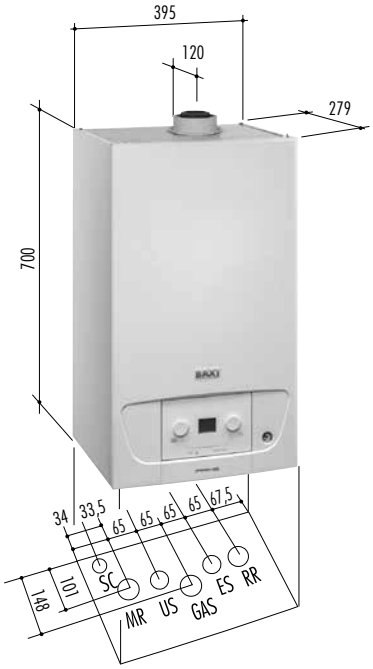

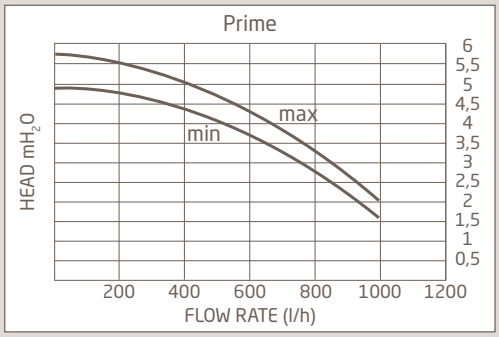

Condensing gas boilers

Duo-tec Compact GA (Non-ErP)
20 GA, 24 GA,
28 GA, 1.24 GA

MR Heating system flow G 3/4"
US DHW outlet G 1/2"
(for heating only models
tank flow G 3/4")
GAS Gas inlet G 3/4"
ES Mains water G 1/2"
RR Heating system return G 3/4"
SC Condensing trap possible to
connect on a pipe Ø 22
A Boiler hanging points.
Distance between hanging
points: 246 mm
B Distance between hanging
points and hydraulic connections

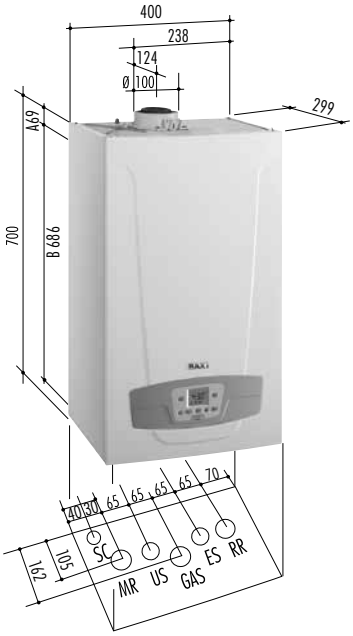

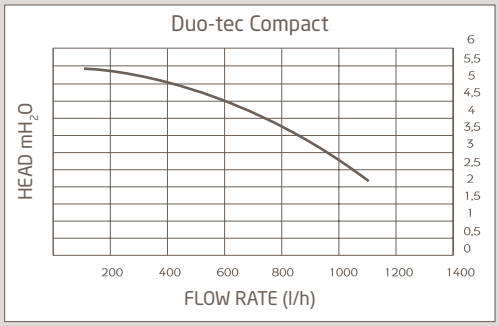

Condensing gas boilers

Nuvola Platinum+ 24 GA, 33 GA

1 DHW outlet G 1/2"
2 Mains water G 1/2"
3 Heating system return G 3/4"
4 Heating system flow G 3/4"
5 Gas inlet G 3/4"
SC Condensing trap possible to connect on a pipe Ø22

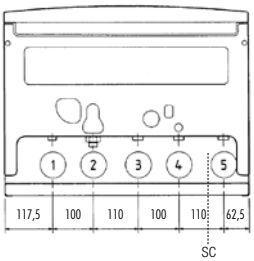

bottom view

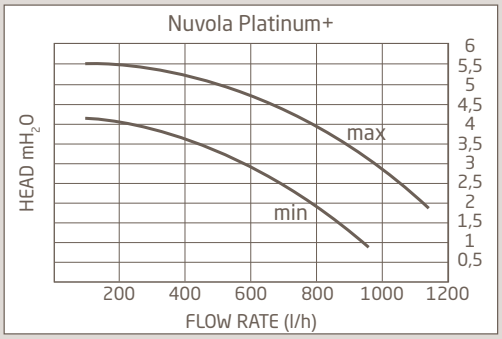

Nuvola Duo-tec+ 16 GA, 24 GA, 33 GA VES

1 DHW outlet G 1/2"
2 Mains water G 1/2"
3 Heating system return G 3/4"
4 Heating system flow G 3/4"
5 Gas inlet G 3/4"
SC Condensing trap possible to connect on a pipe Ø22

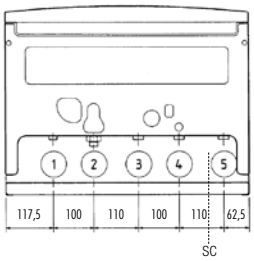

bottom view

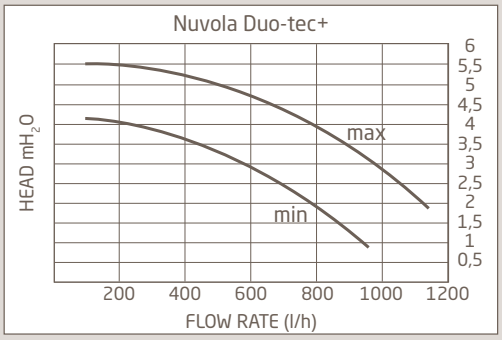

Condensing gas boilers

Luna IN Plus (built-in installation)

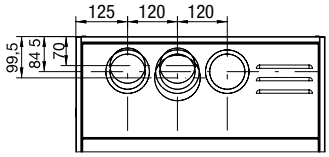

frontal view

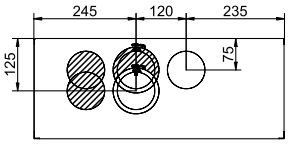

top view

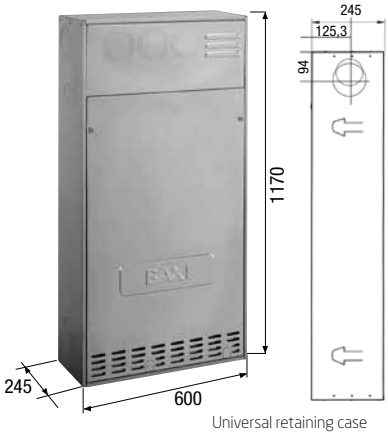

Universal retaining case

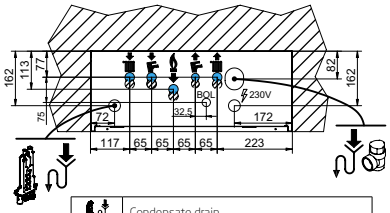

	Condensate drain
	Safety valve drain
	Heating systrm flow (G3/4")
	DHW outlet (G1/2") mod. 24 and 28 / cylinder (G3/4") mod. 1.24
	GAS inlet (G3/4")
	DHW inlet / Circuit filling (G1/2")
	Heating system return (G3/4")

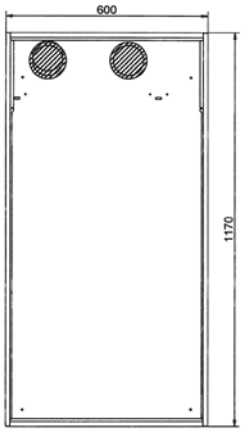

Mounting cut-out

Luna IN Plus (wall hung installation)

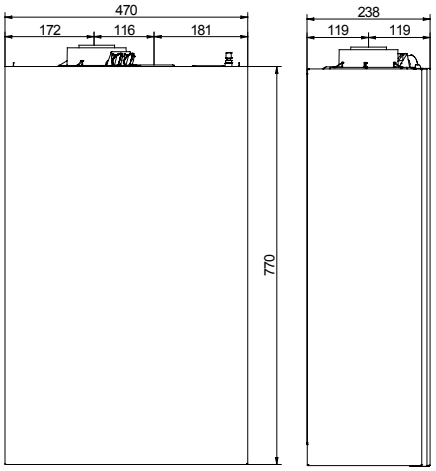

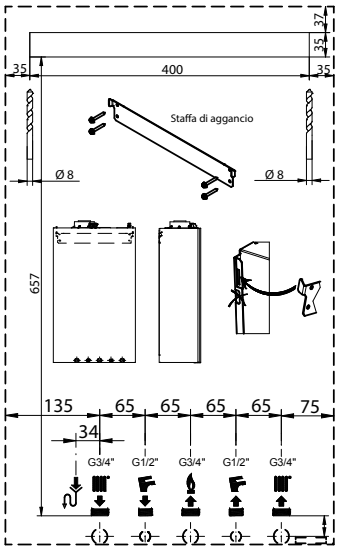

	Condensate drain
	Safety valve drain
	Heating systrm flow (G3/4")
	DHW outlet (G1/2") mod. 26 and 30 / cylinder (G3/4") mod. 1.24
	GAS inlet (G3/4")
	DHW inlet / Circuit filling (G1/2")
	Heating system return (G3/4")

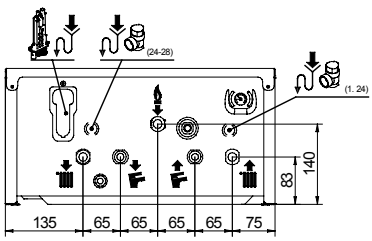

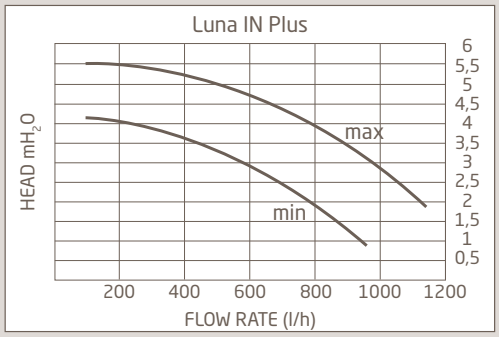

Dimensions (mm)

Condensing gas boilers

Luna Air
(wall hung installation)

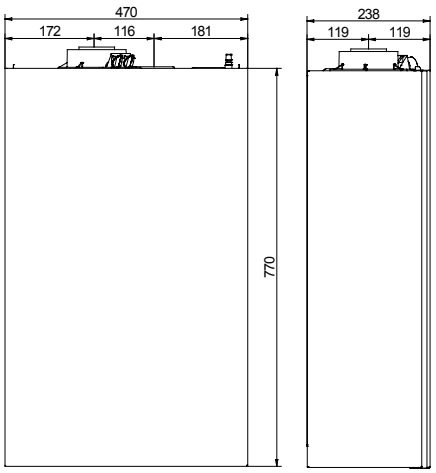

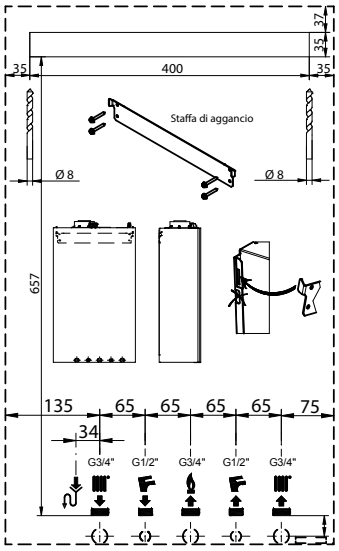

Mounting cut-out and bracket are included in the boiler's package

	Condensate drain
	Safety valve drain
	Heating systrm flow (G3/4")
	DHW outlet (G1/2") mod. 24 and 28
	GAS inlet (G3/4")
	DHW inlet / Circuit filling (G1/2")
	Heating system return (G3/4")

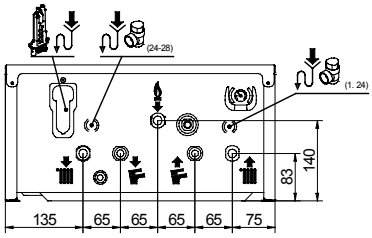

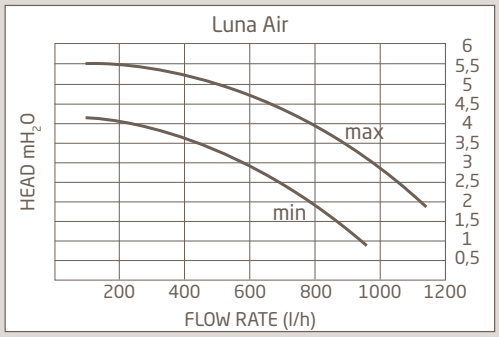

Luna Air
(built-in installation)

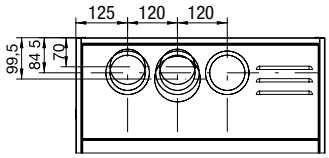

frontal view

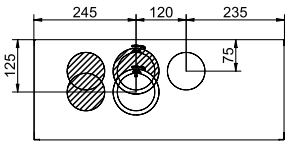

top view

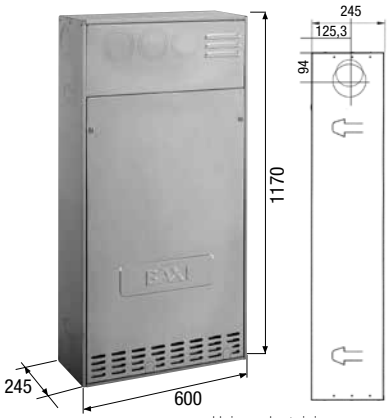

Universal retaining case

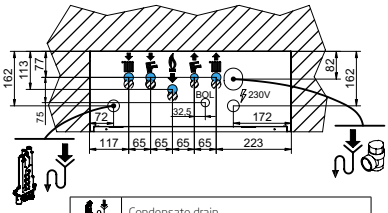

	Condensate drain
	Safety valve drain
	Heating systrm flow (G3/4")
	DHW outlet (G1/2") mod. 26 and 28
	GAS inlet (G3/4")
	DHW inlet / Circuit filling (G1/2")
	Heating system return (G3/4")

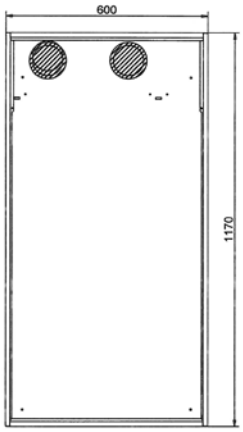

Mounting cut-out

Dimensions (mm)

Combi with DHW storage and solar integration

Power 1.32
Heating only

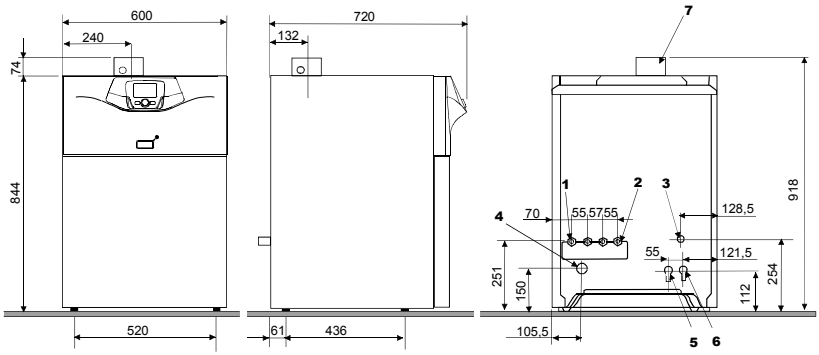

1 Heating system return G 3/4"
2 Heating system flow G 3/4"
3 Gas inlet 1/2"
4 Condensing trap Ø 24x19
5 2a zone flow (optional) G 3/4"
6 2a zone return (optional) G 3/4"
7 Flue Ø 60/100 - (80/125 available as accessory)

Power 32 Combi 160
Tank above the boiler

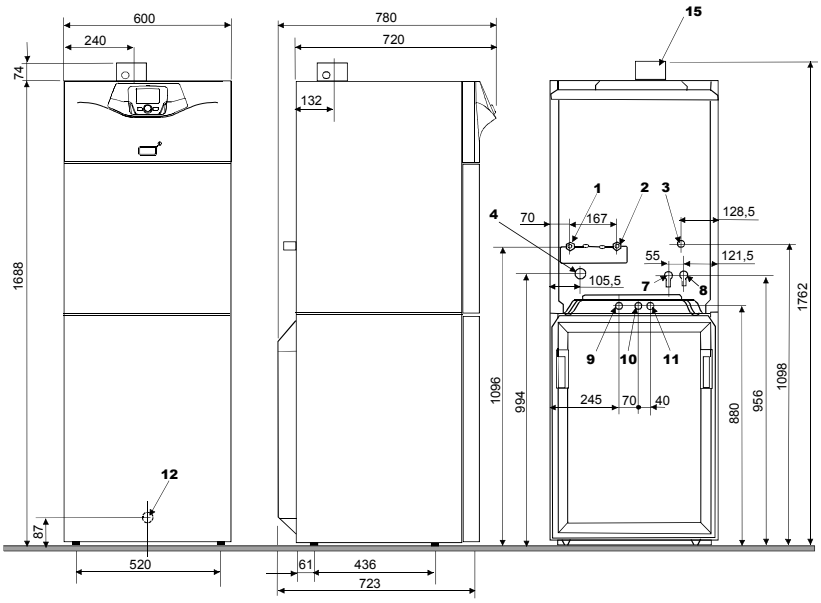

1 Heating system return G 3/4"
2 Heating system flow G 3/4"
3 Gas inlet 1/2"
4 Condensing trap Ø 24x19
5 DHW tank return G 3/4"
6 DHW tank flow G 3/4"
7 2a zone flow (optional) G 3/4"
8 2a zone return (optional) G 3/4"
9 Mains water G 3/4"
10 DHW outlet G 3/4"
11 Recirculation outlet G 3/4"
12 Drain Ø 14
15 Flue Ø 60/100 - (80/125 available as accessory)

Power 32 Combi 160
Tank beside the boiler

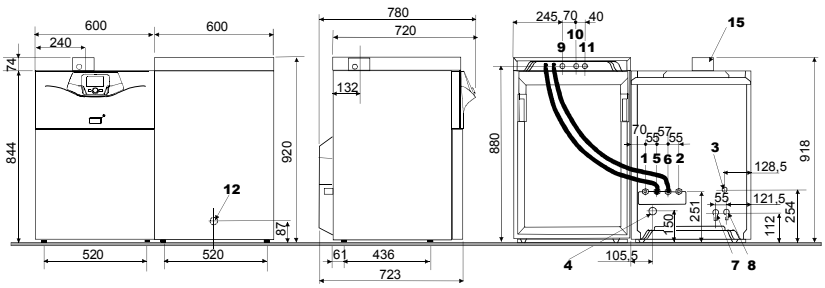

Dimensions (mm)

Combi with DHW storage and solar integration

Power 32 Solar 220
Tank above the boiler

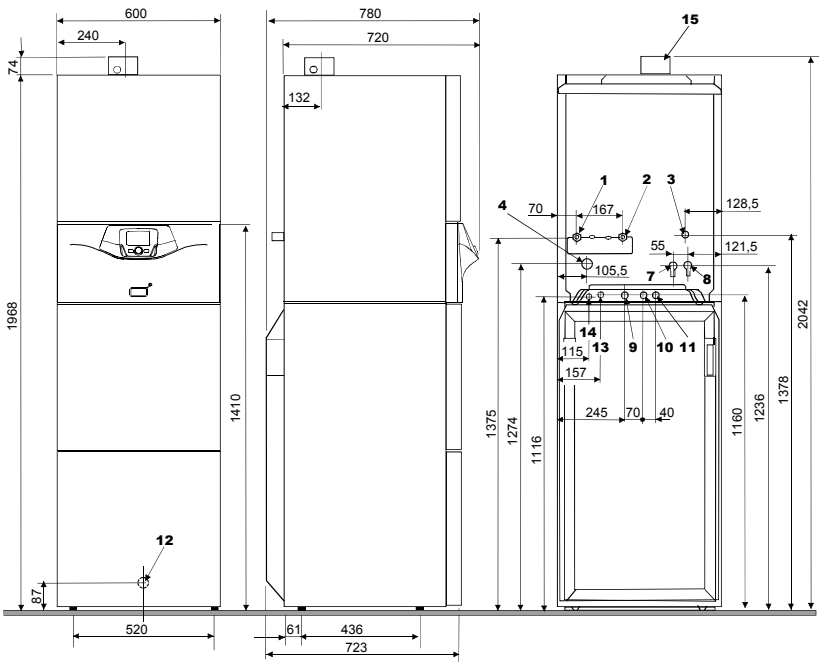

Power 32 Solar 220
Tank beside the boiler

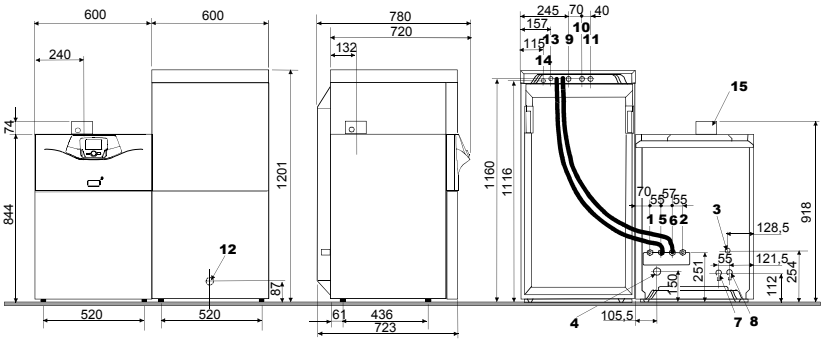

1 Heating system return G 3/4"
2 Heating system flow G 3/4"
3 Gas inlet 1/2"
4 Condensing trap Ø 24x19
5 DHW tank return G 3/4"
6 DHW tank flow G 3/4"
7 2a zone flow (optional) G 3/4"
8 2a zone return (optional) G 3/4"
9 Mains water G 3/4"
10 DHW outlet G 3/4"
11 Recirculation outlet G 3/4"
12 Drain Ø 14
13 Solar coil inlet G 3/4"
14 Solar coil outlet G 3/4"
15 Flue Ø 60/100 - (80/125 available as accessory)

Dimensions (mm)

Indirect cilinder for heating only boilers

UB SC

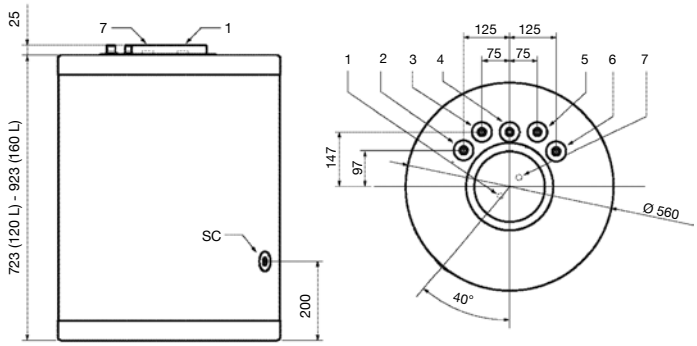

1 Thermometer - Sensor Ø 10 mm
2 Boiler return G 3/4" M
3 DHW outlet G 1/2" M
4 Recirculation G 1/2" M
5 Cold water inlet G 1/2" M
6 Boiler flow G 3/4" M
7 Anode G 3/4"
SC Drain G 1/2"

Combi 80 L+

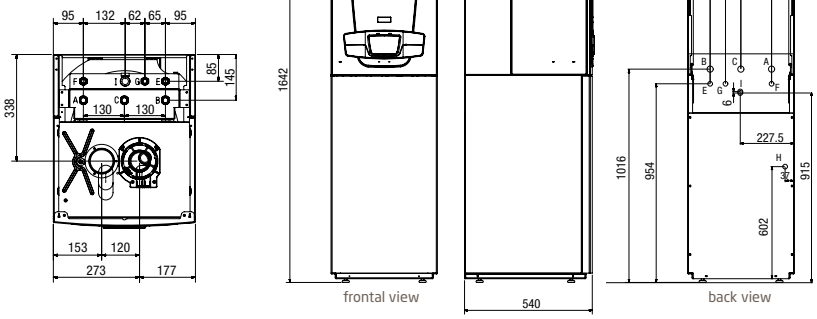

A Heating system flow G 3/4" M
B Heating system return G 3/4" M
C Gas inlet G 3/4" M
E Mains water G 1/2" M
F DHW outlet G 1/2" M
G DHW recirculation G 1/2" M
H Condensing trap possible to connect on a pipe Ø 22
I Safety valve drain

Dimensions (mm)

Gas boilers

Luna3 Blue+
180 i, 240 i, 1.180 i

MR Heating system flow G 3/4"
US DHW outlet G 1/2" (for heating only models, tank flow G 3/4")
GAS Gas inlet G 3/4"
ES Mains water G 1/2"
RR Heating system return G 3/4"
A Boiler hanging points. Distance between hanging points: 425 mm
B Distance between hanging points and hydraulic connection
C Ø 110: 180 i – Ø 130: 240 i

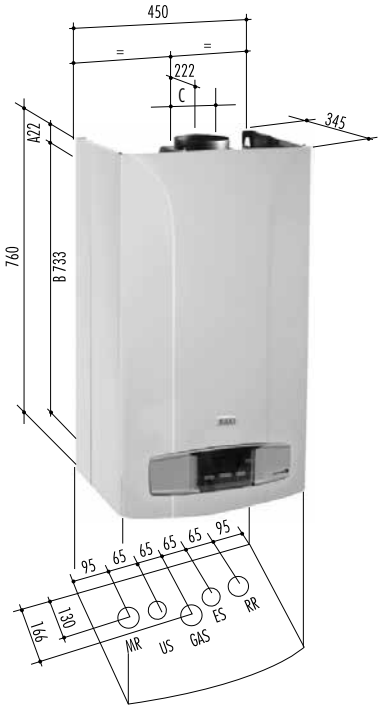

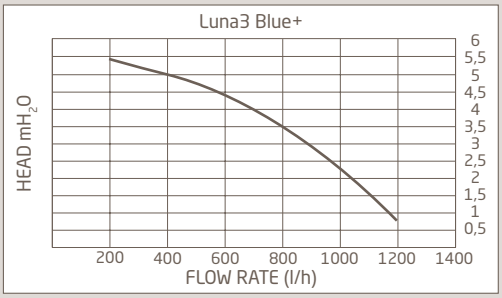

Non-ErP gas boilers

Luna3 Comfort
240 Fi, 310 Fi,
1.240 Fi, 1.310 Fi

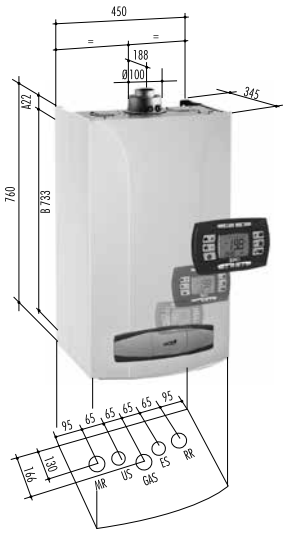

Luna3 Comfort
240 i,
1.240 i

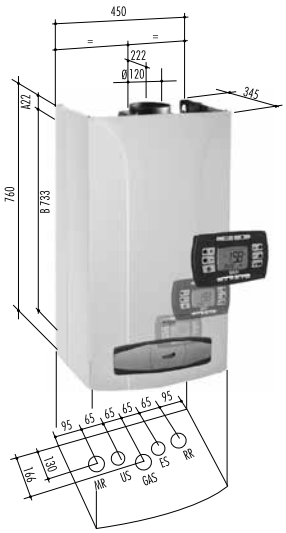

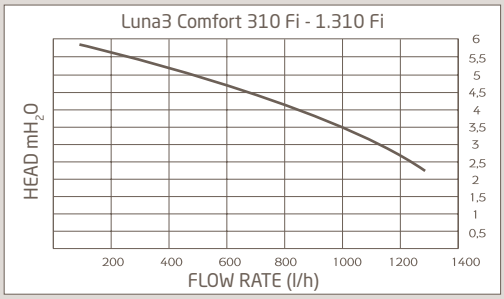

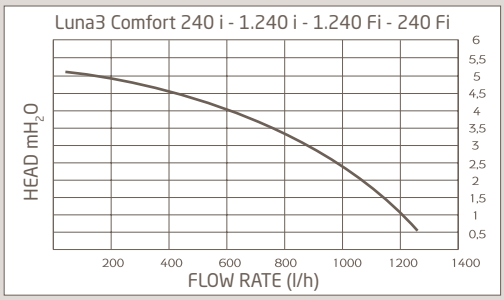

MR Heating system flow G 3/4"
US DHW outlet G 1/2" (for heating only models storage tank flow G 3/4")
GAS Gas inlet G 3/4"
ES Mains water G 1/2"
RR Heating system return G 3/4"
A Boiler hanging points. Distance between hanging points: 425 mm
B Distance between hanging points and hydraulic connection

Non-ErP gas boilers

Luna3 240 Fi, 280 Fi, 310 Fi, 1.310 Fi

Luna3 240 i

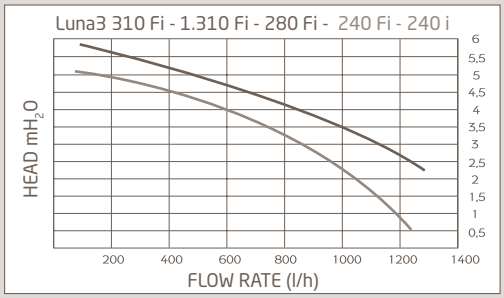

MR Heating system flow G 3/4"
US DHW outlet G 1/2" (for heating only models storage tank flow G 3/4")
GAS Gas inlet G 3/4"
ES Mains water G 1/2"
RR Heating system return G 3/4"
A Boiler hanging points. Distance between hanging points: 425 mm
B Distance between hanging points and hydraulic connection

Nuvola3 Comfort 240 Fi, 280 Fi, 320 Fi

Nuvola3 Comfort 240 i, 280 i

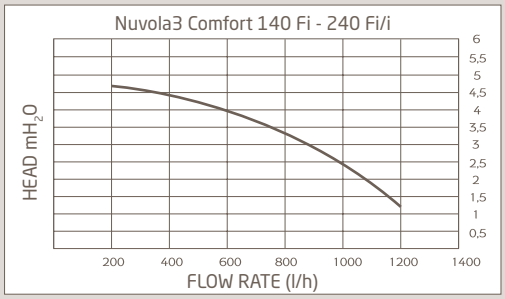

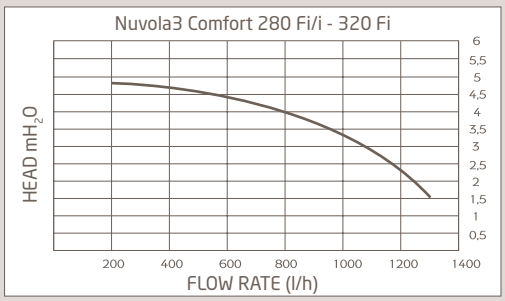

1 DHW outlet G 1/2"
2 Mains water G 1/2"
3 Heating system return G 3/4"
4 Heating system flow G 3/4"
5 Gas inlet G 3/4"

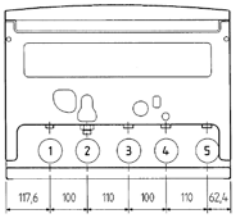

bottom view

Non-ErP gas boilers

Ecofour
24 F, 1.14 F, 1.24 F

Ecofour
24, 1.14, 1.24

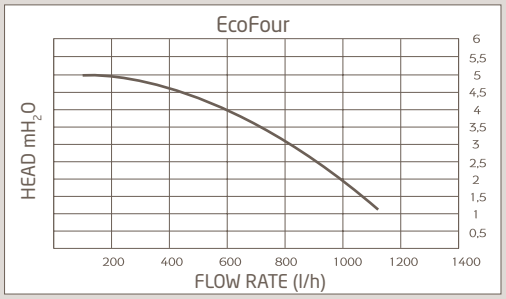

MR	Heating system fl ow G 3/4"	A	Boiler hanging points. Distance between hanging points: 343 mm
US	DHW outlet G 1/2"		
GAS	Gas inlet G 3/4"		
ES	Mains water G 1/2"	B	Distance between hanging points and hydraulic connection
RR	Heating system return G 3/4"		

Eco4s
10 F, 18 F, 24 F, 1.24 F

Eco4s
24

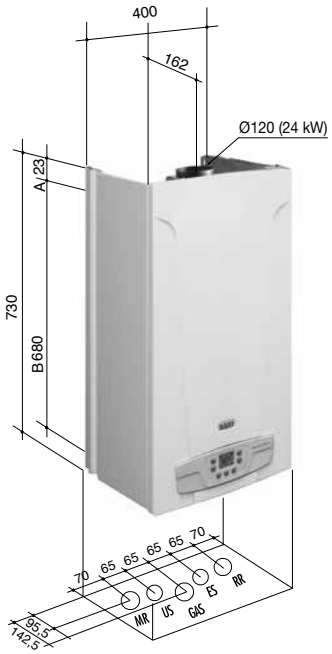

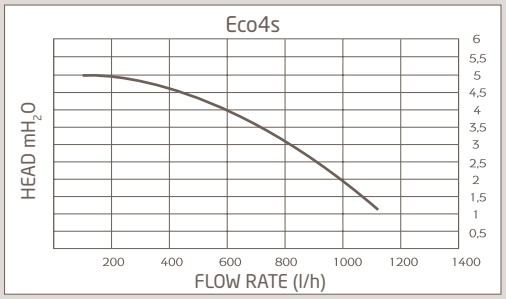

MR	Heating system fl ow G 3/4"	A	Boiler hanging points. Distance between hanging points: 343 mm
US	DHW outlet G 1/2"		
GAS	Gas inlet G 3/4"		
ES	Mains water G 1/2"	B	Distance between hanging points and hydraulic connection
RR	Heating system return G 3/4"		

Non-ErP gas boilers

Slim 1.230 Fi, 1.300 Fi

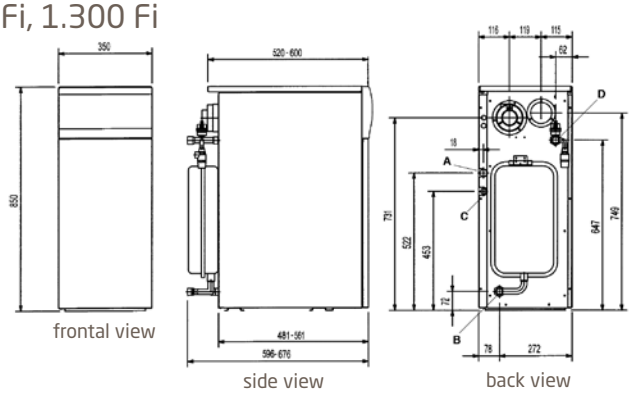

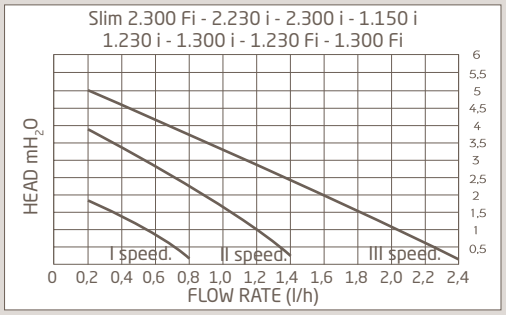

A Heating system flow G 3/4" M
B Heating system return G 3/4" M
C Gas supply pipe G 1/2" M
D Tank flow G 3/4" F

Slim 1.230 FiN, 1.300 FiN

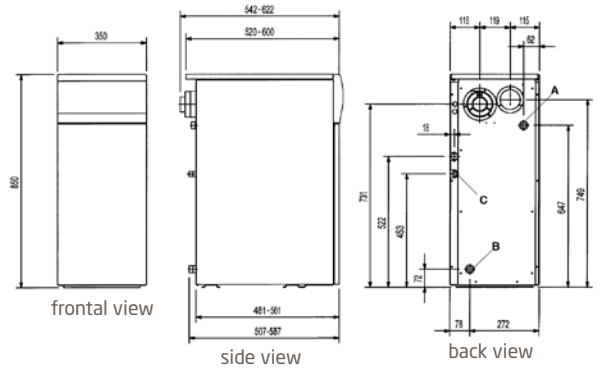

Slim 1.150 i, 1.230 i, 1.300 i

Slim 1.230 iN, 1.300 iN

Slim 1.400 iN, 1.490 iN, 1.620 iN

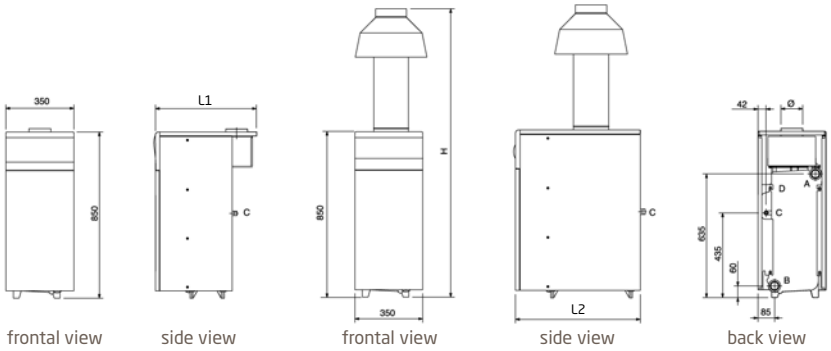

	L_1
Slim 1.150i	520
Slim 1.230i, 1.230iN	600
Slim 1.300i, 1.300iN	680

	H	L_2
Slim 1.400iN	1490	635
Slim 1.490iN	1490	715
Slim 1.620iN	1650	875

Slim 2.300 Fi

Slim 2.230 i, 2.300 i

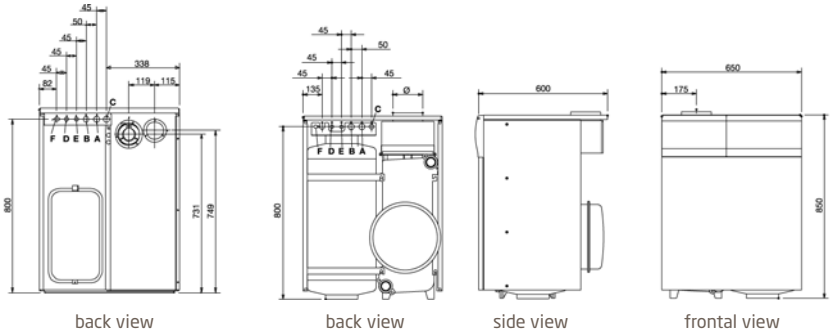

A Heating system flow G 3/4" M
B Heating system return G 3/4" M
C Gas supply pipe G 1/2" M
D Mains water G 1/2" M
E DHW outlet G 1/2" M
F Recirculation G 1/2" M (Slim 2.260 Fi)
Recirculation G 1/2" F (Slim 2.230 i, 2.300 Fi)

Dimensions (mm)

Non-ErP gas boilers

Slim HPS
1.80, 1.99, 1.110

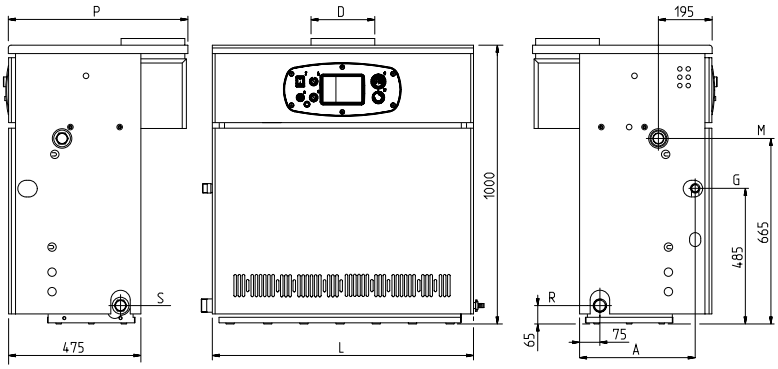

R Heating system return 11/2"
M Heating system flow 11/2"
G Gas inlet 1"
S Boiler drain 3/4"

		1.80	1.99	1.110
L	mm	940	1140	1240
D	mm	180	225	250
P	mm	645	645	670
A	mm	415	415	400

Slim EF
1.22, 1.31, 1.39, 1.49, 1.61

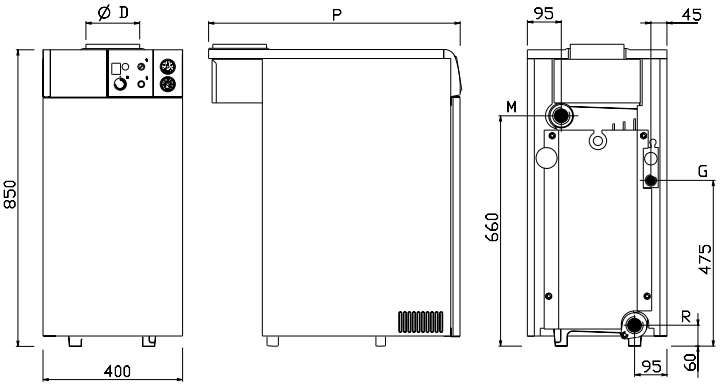

		1.22	1.31
P	mm	595	720
D	mm	130	150

Connections
R Heating system return 1 1/2"
M Heating system flow 1 1/2"
G Gas connection 1/2"

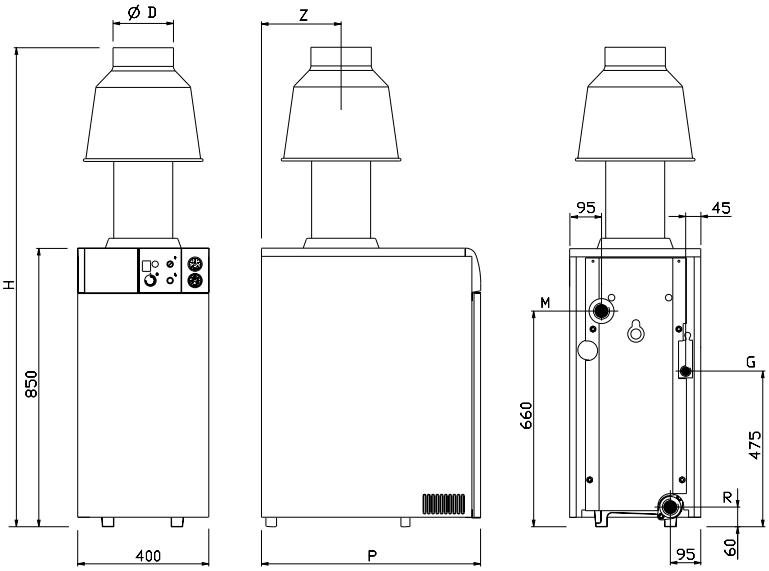

		1.39	1.49	1.61
P	mm	670	770	870
H	mm	1435	1435	1675
Z	mm	245	295	345
D	mm	180	180	200

Connections
R Heating system return 1 1/4"
M Heating system flow 1 1/2"
G Gas connection 3/4"

Non-ErP gas boilers

Luna3 Comfort and Combi 80 L
240 Fi, 310 Fi

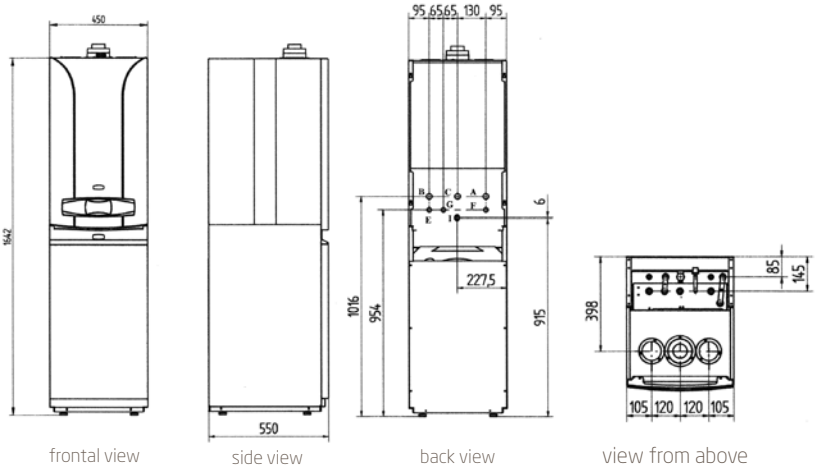

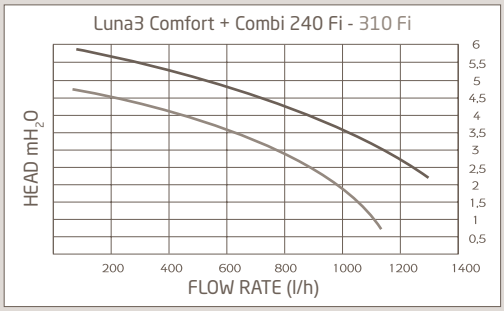

A Heating system flow G 3/4" M
B Heating system return G 3/4" M
C Gas inlet G 3/4" M
E Mains water G 1/2" M
F DHW outlet G 1/2" M
G DHW recirculation G 1/2" M
I DHW relief valve outlet

Indirect cilinder for heating only boilers

UB INOX
UB 80, 120

Slim UB INOX
Slim UB 80, 120

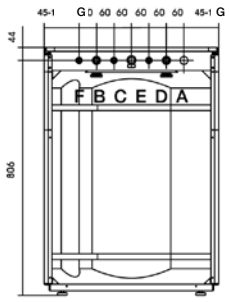

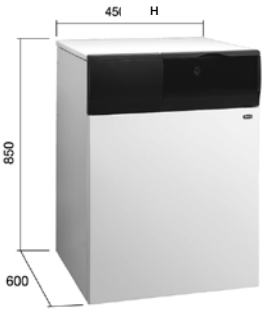

G = 45 mm (80 l)
120 mm (120 l)

H = 450 mm (80 l)
600 mm (120 l)

A Connection heating system flow/indirect cylinder 3/4"M
B Connection indirect cylinder return/heating system 3/4" M
C Mains water 1/2" M
D Domestic hot water outlet 1/2" M
E Relief valve 1/2" F
F Recirculation 1/2" M

Coaxial flue system

Luna Platinum+, Luna Duo-tec E, Prime, Duo-tec Compact E,
Nuvola Platinum+, Nuvola Duo-tec+, Duo-tec Compact GA, Luna IN Plus, Luna Air

■ Ø 60/100 mm
■ Ø 80/125 mm

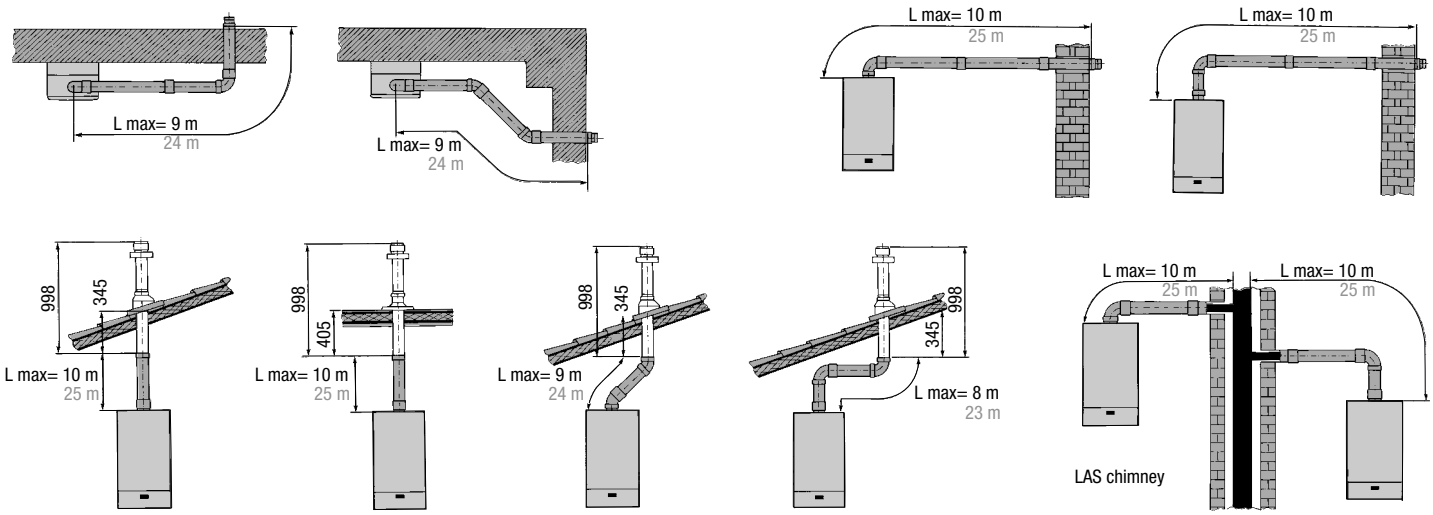

Models	Tubes maximum length (m)		Length reduction for a 90° bend insertion (m)	Length reduction for a 45° bend insertion (m)
	Ø 60/100	Ø 80/125		
Luna Platinum+ / Luna Duo-tec E	10	25	1	0,5
Duo-tec Compact E / Prime				
Nuvola Platinum+ / Nuvola Duo-tec+				
Luna IN Plus / Luna Air				
Power 1.32 horizontal coaxial flue C13				
Power 1.32 vertical coaxial flue C13				

Flue pipe dimensions (mm)

Luna Platinum+, Luna Duo-tec E

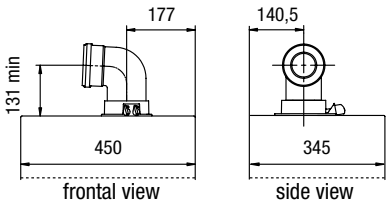

Luna Platinum+ and Combi Luna Duo-tec+ and Combi

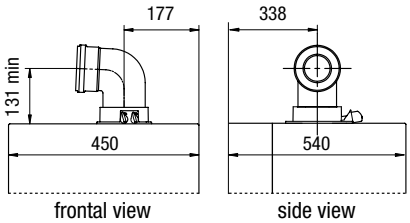

Prime

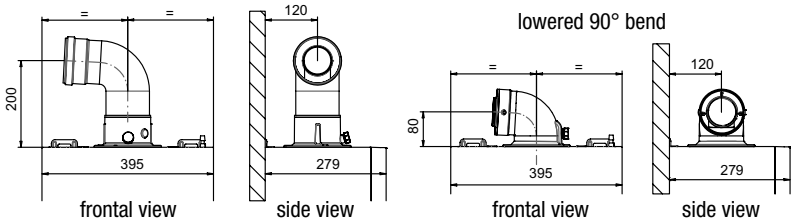

Coaxial flue system

Luna Platinum+, Luna Duo-tec E, Prime, Duo-tec Compact E, Nuvola Platinum+, Nuvola Duo-tec+, Duo-tec Compact GA, Luna IN Plus, Luna Air

Flue pipe dimensions (mm)

Duo-tec Compact E, Duo-tec Compact GA

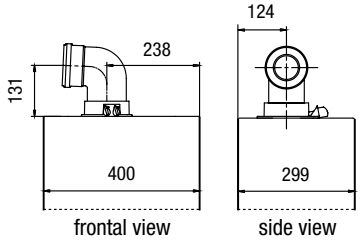

Nuvola Platinum+ Nuvola Duo-tec+

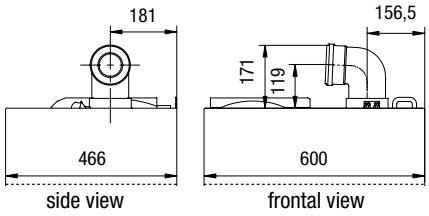

Luna IN Plus Luna Air (built-in installation)

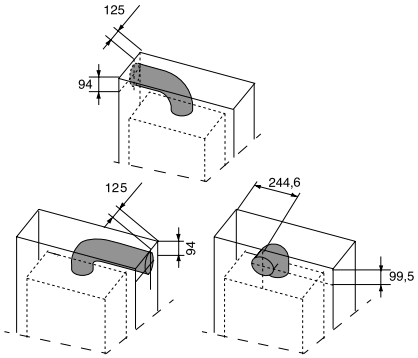

Luna IN Plus Luna Air (wall hung installation)

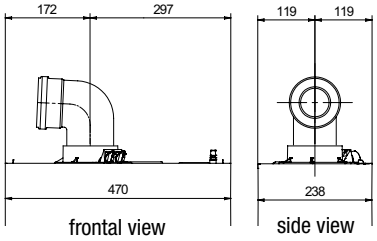

Power 1.32

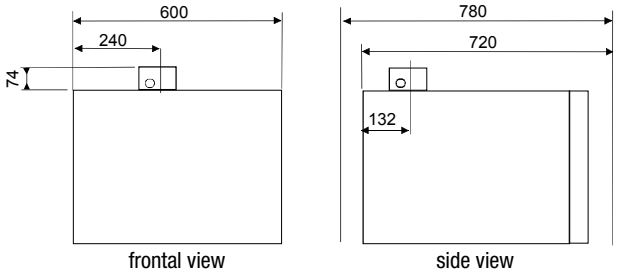

Chimney terminal for gas condensing boilers

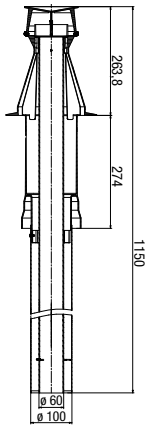

Vertical coaxial flue terminal
Ø 60/100 mm
KUG 71413581

Coaxial flue system

Luna3 Comfort, Luna3, Ecofour, Eco4s

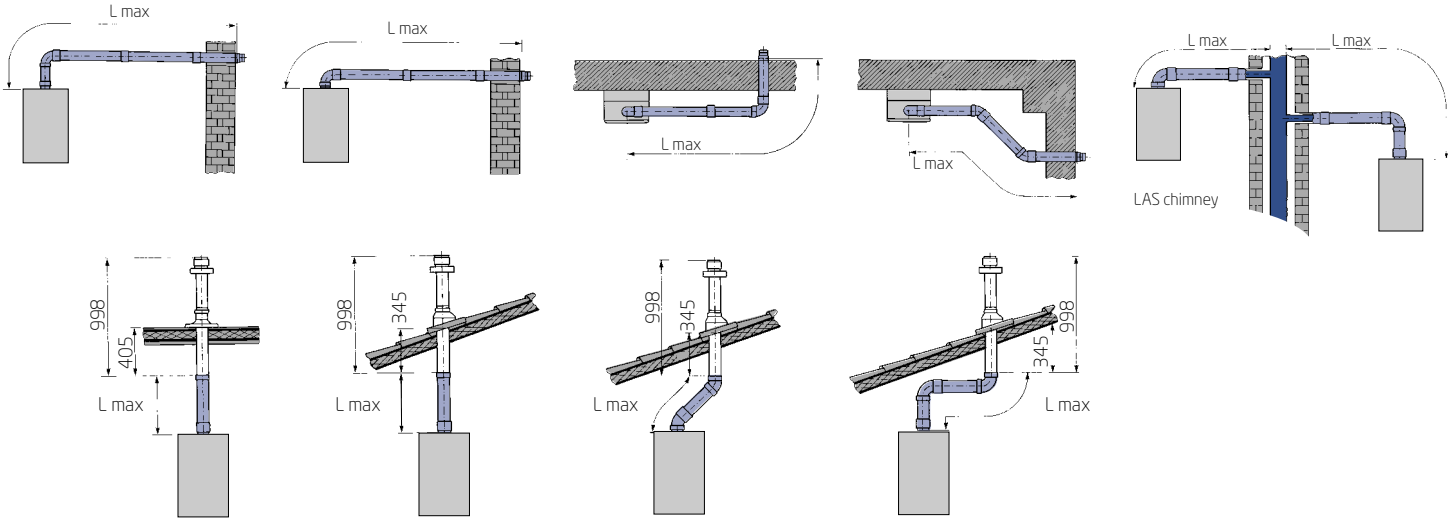

Lmax can change according to the flue type and boiler models. See the instruction manual.

		Tubes maximum length (m)		Length reduction for a 90° bend insertion (m)	Length reduction for a 45° bend insertion (m)
		Ø 60/100	Ø 80/125		
Horizontal flue	Luna3 Comfort 24 kW - Luna3 24 kW	5	9	1	0,5
	Luna3 Comfort 31 kW - Luna3 28/31 kW	4	8		
	Ecofour - Eco4s	5	-		
Vertical chimney	Luna3 Comfort - Luna3	4	10		
	Ecofour - Eco4S	4	-		

Flue pipe dimensions (mm)

Luna3 Comfort, Luna3

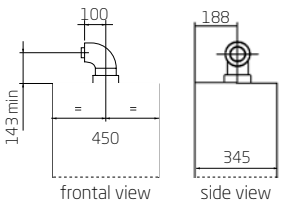

Ecofour, Eco4s

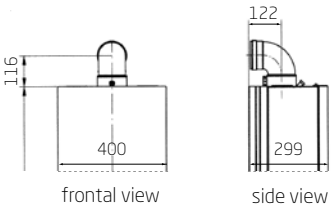

Coaxial flue system

Nuvola3 Comfort

■ Ø 60/100 mm
■ Ø 80/125 mm

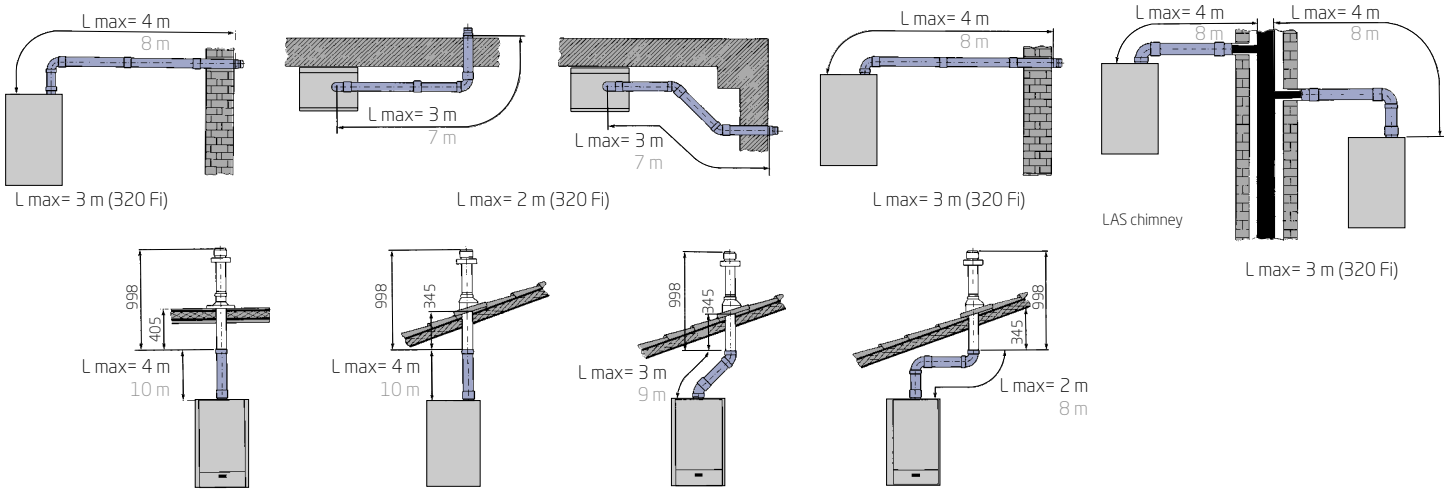

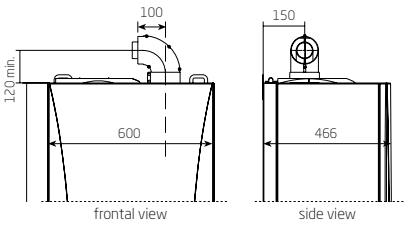

Flue pipe dimensions (mm)

		Tubes maximum length (m)		Length reduction for a 90° bend insertion (m)	Length reduction for a 45° bend insertion (m)
		Ø 60/100	Ø 80/125		
Horizontal flue	24/28 kW	4	8	1	0,5
	32 kW	3	8		
Vertical chimney		4	10		

Slim

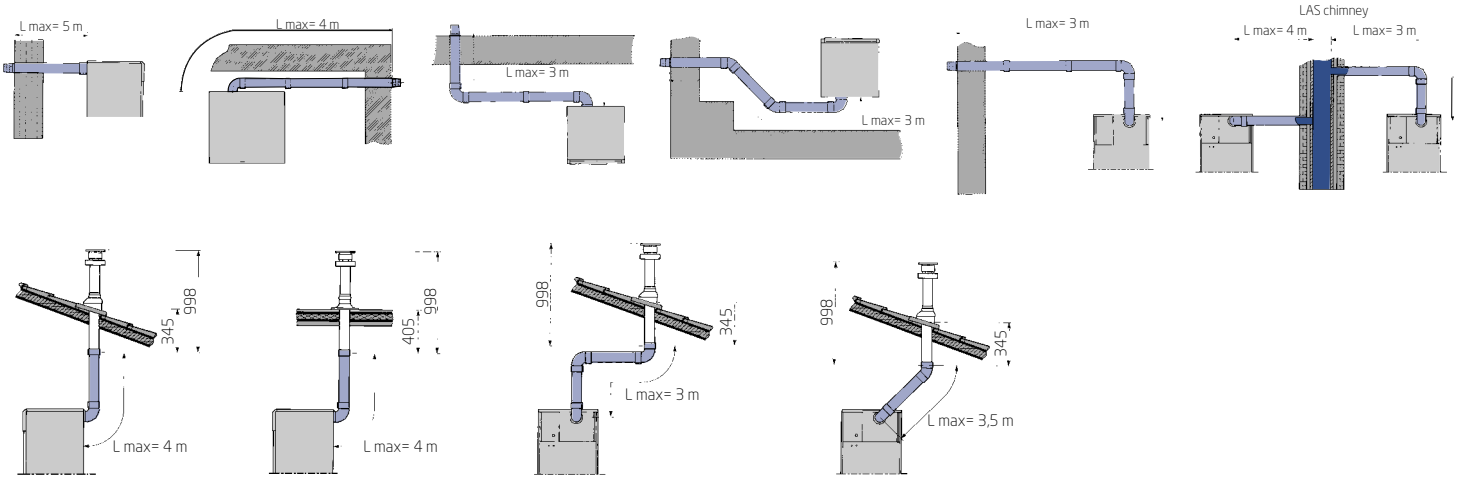

Slim 1.230 Fi/FiN, 1.300 Fi/FiN Slim 2.300 Fi

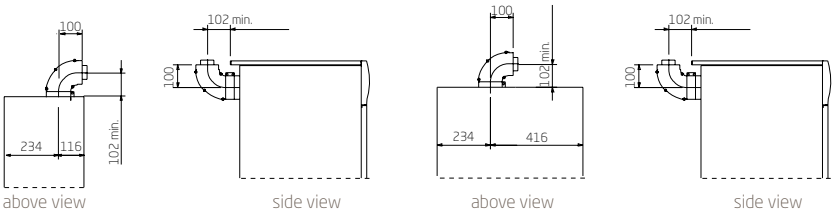

Flue pipe dimensions (mm)

Tubes maximum length (m)	Length reduction for a 90° bend insertion (m)	Length reduction for a 45° bend insertion (m)	Ø flue mm
5	1	0,5	60 - 100

Dual flue system

Luna Platinum+, Luna Duo-tec E, Prime, Duo-tec Compact E, Nuvola Platinum+, Nuvola Duo-tec+, Duo-tec Compact GA, Luna IN Plus, Luna Air

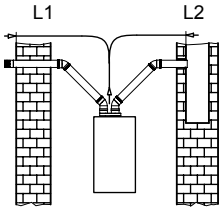

L1, L2 Ø 80

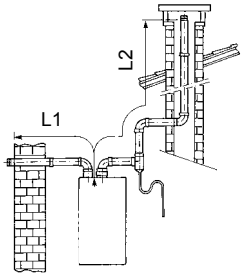

L1 Ø 80, L2 Ø 60

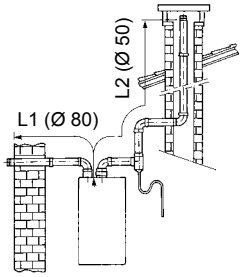

L1 Ø 80, L2 Ø 50
rigid or flexible

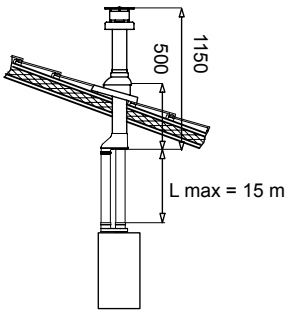

Ø 80

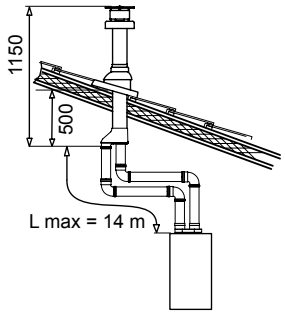

Ø 80

L1 = INTAKE PIPE / L2 = FLUE PIPE

Models	RIGID FLUE PIPE								
	Length (m)			Length (m)			Length (m)		
	intake pipe (L1) Ø80, flue pipe (L2) Ø80			intake pipe (L1) Ø80, flue pipe (L2) Ø60			intake pipe (L1) Ø80, flue pipe (L2) Ø50*		
	L max = L1+L2	**L1 max**	**L2 max = L max-L1 max**	L max = L1+L2	**L1 max**	**L2 max = L max-L1 max**	L max = L1+L2	**L1 max**	**L2 max**
Luna Platinum+ Luna Duo-tec E Nuvola Platinum+ Nuvola Duo-tec+ Luna IN Plus Luna Air Duo-tec Compact E Duo-tec Compact GA Prime 24	80	15	65	40	10	30	40	10	30
Prime 26	80	15	65	40	10	30	35	10	25
Prime 28, 30** 1.24	80	15	65	40	10	30	30	10	20
Power 1.32	80	15	65	-	-	-	-	-	-

Models	FLEXIBLE FLUE PIPE					
	Length (m)			Length (m)		
	intake pipe (L1) Ø80, flue pipe (L2) Ø80			intake pipe (L1) Ø80, flue pipe (L2) Ø50*		
	L max = L1+L2	**L1 max**	**L2 max = L max-L1 max**	L max = L1+L2	**L1 max**	**L2 max**
Luna Platinum+ Luna Duo-tec E Nuvola Platinum+ Nuvola Duo-tec+ Luna IN Plus Luna Air Duo-tec Compact E Duo-tec Compact GA Prime 24	80	15	65	40	10	30
Prime 26	80	15	65	35	10	25
Prime 28, 30** 1.24	80	15	65	30	10	20

For flue pipes Ø 80 and 60, the maximum length of intake pipe (L1 max) can't be exceeded
* Ø50 flue pipe only for 24 kW boilers, Prime also 28 kW. The maximum length of intake (L1 max) and flue (L2 max) pipes can't be exceeded.
** with Ø50 and Ø60 flue pipe for Prime 30, it is necessary to lowering the power appliance to 28 kW.

Dual flue system

Luna Platinum+, Luna Duo-tec E, Prime, Duo-tec Compact E, Nuvola Platinum+, Nuvola Duo-tec+, Duo-tec Compact GA, Luna IN Plus, Luna Air

Models	RIGID FLUE PIPE					
	→ Ø 80 mm		→ Ø 60 mm		→ Ø 50 mm	
	Length reduction for a 90° bend insertion (m)	Length reduction for a 45° bend insertion (m)	Length reduction for a 90° bend insertion (m)	Length reduction for a 45° bend insertion (m)	Length reduction for a 90° bend insertion (m)	Length reduction for a 45° bend insertion (m)
Luna Platinum+ Luna Duo-tec E Nuvola Platinum+ Nuvola Duo-tec+ Luna IN Plus Luna Air Duo-tec Compact E Duo-tec Compact GA Prime	0,5	0,25	1	0,5	3	1,5
Power 1.32	0,5	0,25	-	-	-	-

Models	FLEXIBLE FLUE PIPE			
	→ Ø 80 mm		→ Ø 50 mm	
	Length reduction for a 90° bend insertion (m)	Length reduction for a 45° bend insertion (m)	Length reduction for a 90° bend insertion (m)	Length reduction for a 45° bend insertion (m)
Luna Platinum+ Luna Duo-tec E Nuvola Platinum+ Nuvola Duo-tec+ Luna IN Plus Luna Air Duo-tec Compact E Duo-tec Compact GA Prime	0,5	0,25	2	1
Power 1.32	-	-	-	-

Flue pipe dimensions (mm)

Luna Platinum+ / Luna Duo-tec E

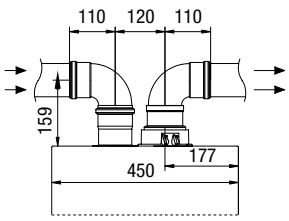

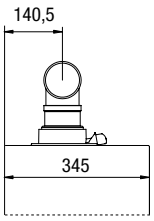

with adjustable dual flue kit

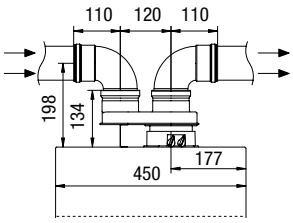

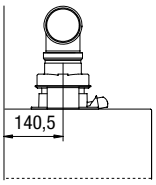

Duo-tec Compact E
Duo-tec Compact GA

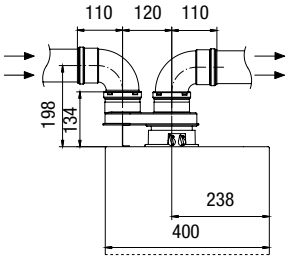

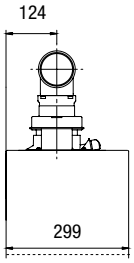

Prime

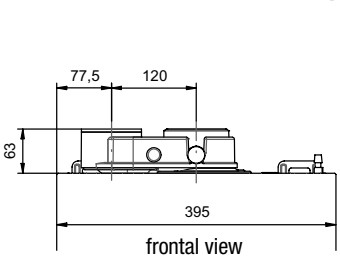

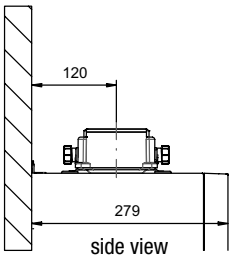

Power 1.32

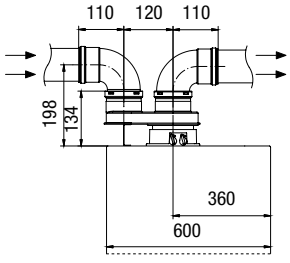

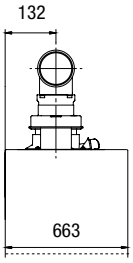

Dual flue system

Luna Platinum+, Luna Duo-tec E, Prime, Duo-tec Compact E, Nuvola Platinum+, Nuvola Duo-tec+, Duo-tec Compact GA, Luna IN Plus, Luna Air

Flue pipe dimensions (mm)

Nuvola Platinum+ / Nuvola Duo-tec+

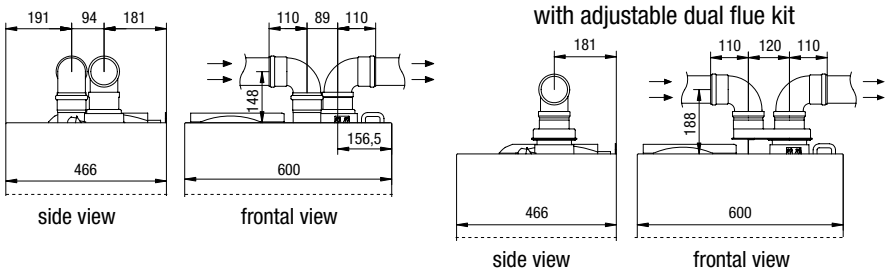

Luna IN Plus / Luna Air
(outdoor wall hung installation in partially protected sites)

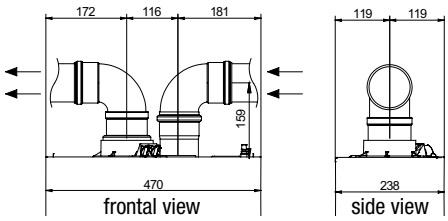

Luna IN Plus / Luna Air
(open air wall hung installation)

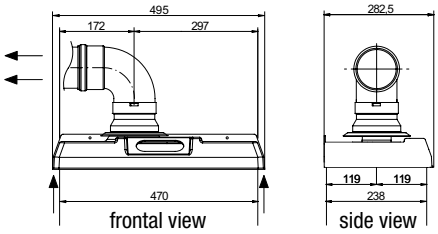

Luna IN Plus / Luna Air
(built-in installation)

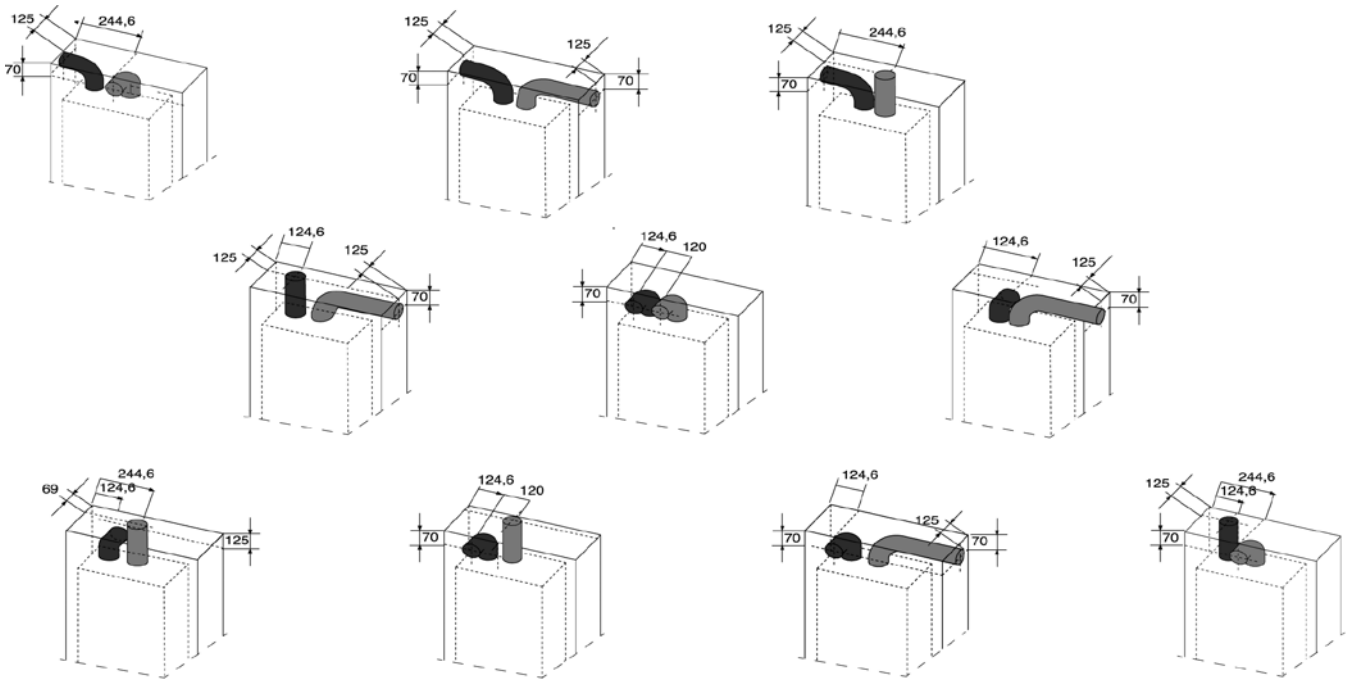

Flexible ducting systems gas boilers

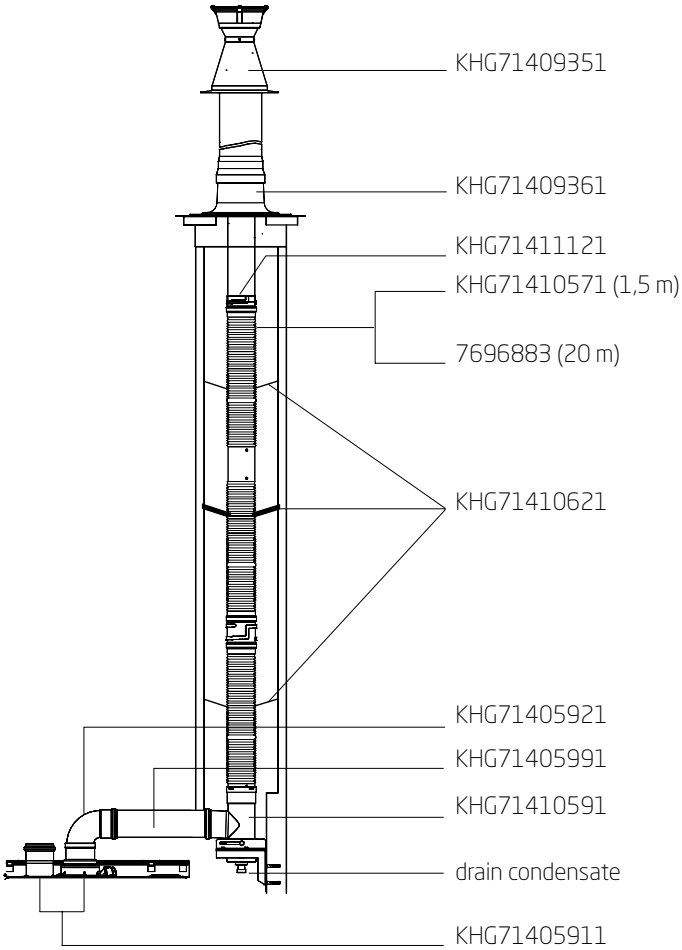

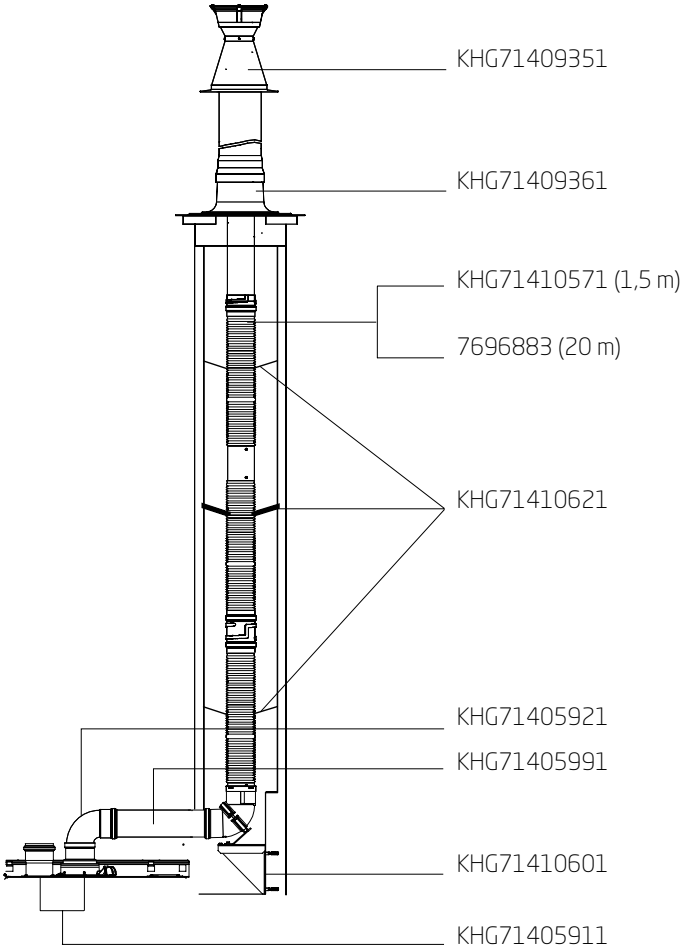

Chimney terminal for gas condensing boilers

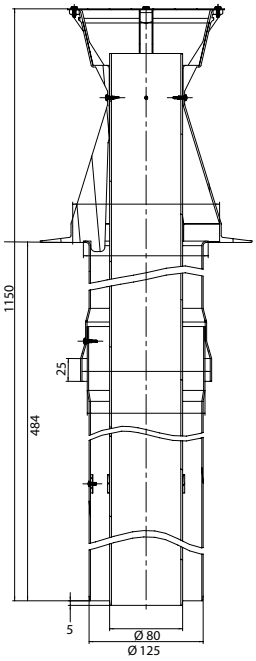

KHG 71409351
Coaxial vertical chimney terminal Ø 80/125
dimensions (mm)

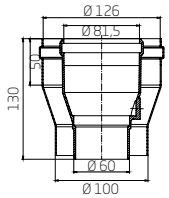

KHG 71409391
Reduction kit from Ø 80/125 to Ø 60/100

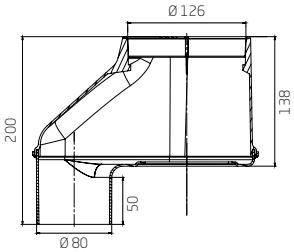

KHG 71409381
Dual flue tubes adapter for coaxial chimney from Ø 80/80 to Ø 80/125
dimensions (mm)

Flexible ducting systems gas boilers

Luna3 Comfort, Luna3, Ecofour, Eco4s

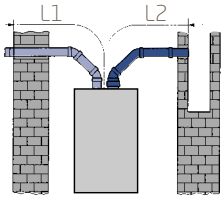

	Luna3 Comfort Luna 3		Ecofour	Eco4s
	24 kW	28/31 kW		
(L1+L2) Max m	40	25	30	30
L1 Max m	10	10	10	8
L2 Max m	30	15	20	22

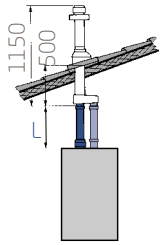

	Luna3 Comfort Luna 3		Ecofour	Eco4s
	24 kW	28/31 kW		
L Max m	15	12	8	15

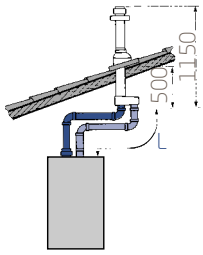

	Luna3 Comfort Luna 3		Ecofour	Eco4s
	24 kW	28/31 kW		
L Max m	14	10	14	7

If the pipe length is longer than 6 meters the condensation collector kit must be installed.
Length reduction for a 90° bend insertion 0,5 m. Length reduction for a 45° bend insertion 0,25 m

Flue pipe dimensions (mm)

Luna3 Comfort, Luna3

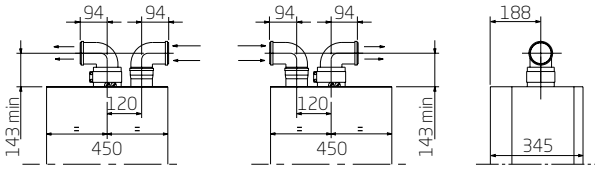

Ecofour, Eco4s

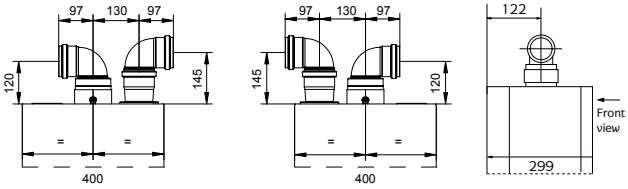

Dual flue system

Nuvola3 Comfort

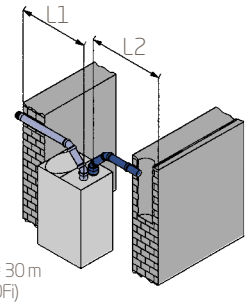

(L1 + L2) max= 30 m
(25 m - 320Fi)

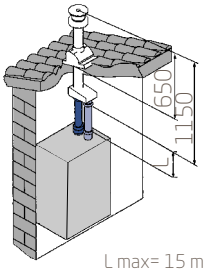

L max= 15 m

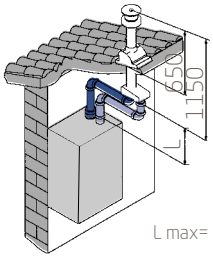

L max= 15 m

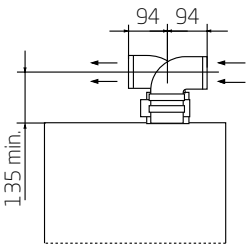

frontal view

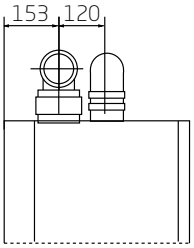

side view

Flue pipe dimensions (mm)

	Length reduction for a 90° bend insertion (m)	Length reduction for a 45° bend insertion (m)	Ø Flue (mm)
Installation with proof terminal	0,5	0,25	80
Installation with chimney terminal	0,5	0,25	133

Slim

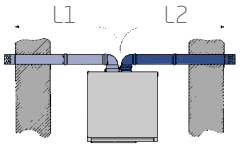

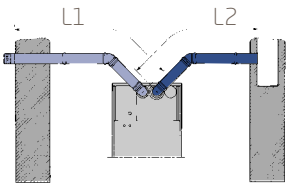

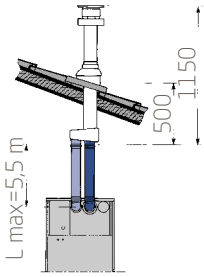

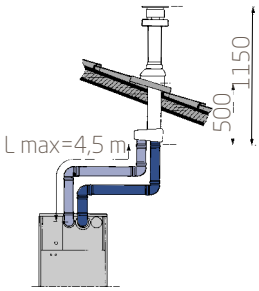

FLUE PIPE (L1) MAXIMUM LENGTH WITH A 90° BEND: 10 m.

INTAKE PIPE (L2) MAXIMUM LENGTH WITH A 90° BEND: 10 m.

	Tubes maximum length (m)	Length reduction for a 90° bend insertion (m)	Length reduction for a 45° bend insertion (m)	Ø Flue (mm)
Installation with proof terminal	20	0,5	0,25	80
Installation with chimney terminal	6	0,5	0,25	133

Slim 1.230 Fi/FiN, 1.300 Fi/FiN

Flue pipe dimensions (mm)

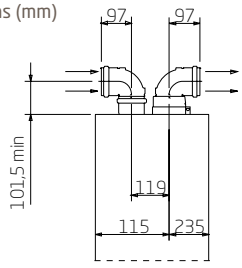

above view

Slim 2.300 Fi

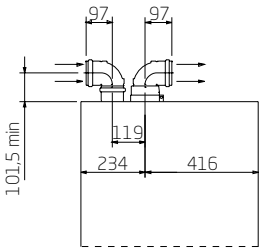

above view

Chimney terminal for gas boilers

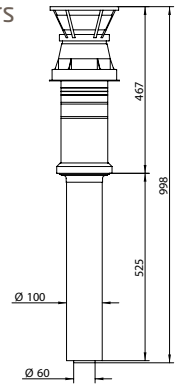

KHG 71403641
Vertical chimney terminal
for coaxial flue system
Ø 60/100
dimensions (mm)

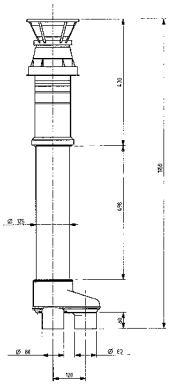

KHG 71403651
Dual flue vertical
chimney terminal
Ø 80/125
dimensions (mm)

Heat Pumps

PBS-i WH2

OUTDOOR UNIT - AWHP MR/TR

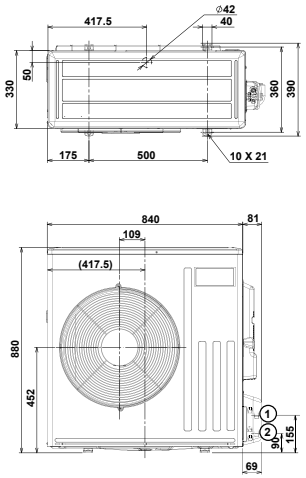

AWHP 4,5 MR
(weight 54 kg)

1	Liquid refrigerant 1/4"
2	Gas refrigerant 1/2"

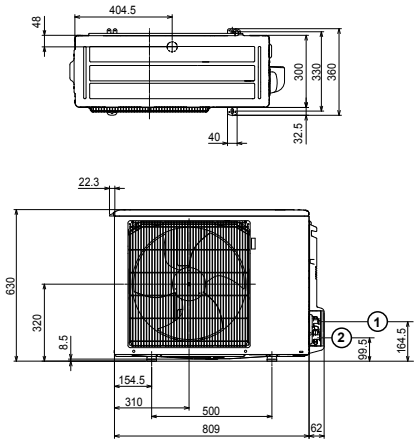

AWHP 6 MR
(weight 42 kg)

1	Liquid refrigerant 1/4"
2	Gas refrigerant 1/2"

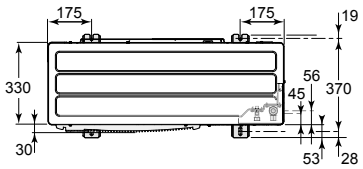

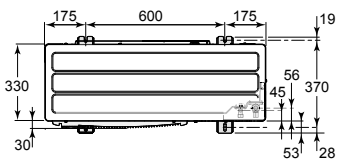

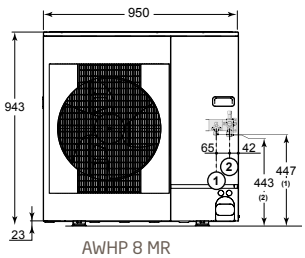

AWHP 8 MR
(weight 75 kg)

1	Liquid refrigerant 3/8"
2	Gas refrigerant 5/8"

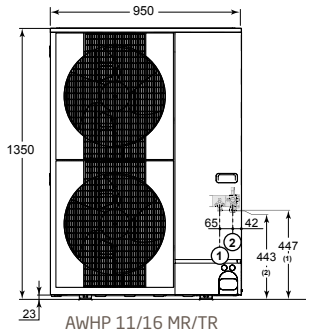

AWHP 11/16 MR/TR
(weight 118 kg) MR
(weight 130 kg) TR

1	Liquid refrigerant 3/8"
2	Gas refrigerant 5/8"

Dimensions (mm)

Heat Pumps

PBS-i H WH2 SYSTEM MANAGER

INDOOR UNIT

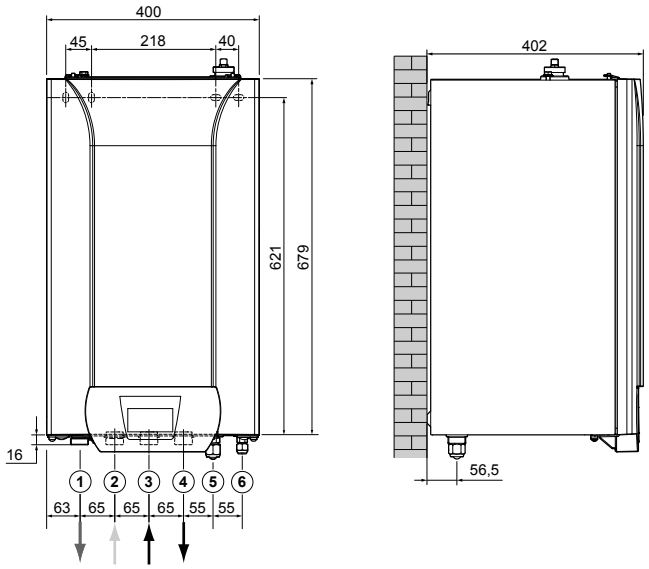

1 Heating flow G 1"
2 Heating return G 1"
3 Integrative boiler flow G 1"
4 Integrative boiler return G 1"
5 Gas refrigerant fitting 5/8"
6 Liquid refrigerant fitting 3/8"

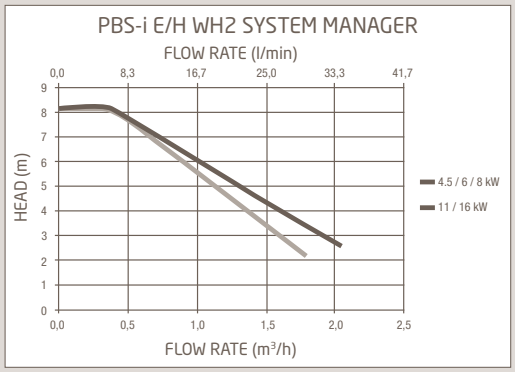

PBS-i E WH2 SYSTEM MANAGER

INDOOR UNIT

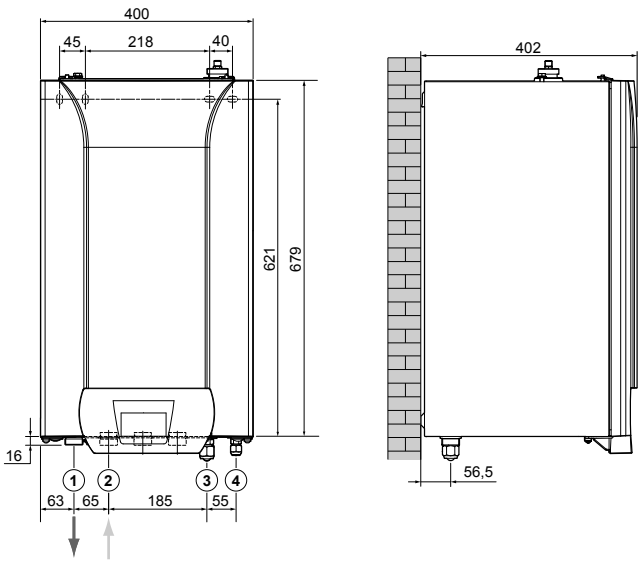

1 Heating flow G 1"
2 Heating return G 1"
3 Gas refrigerant fitting 5/8"
4 Gas refrigerant fitting 5/8"

PBS-i 4,5/6/8/11/16 E/H WH2 SYSTEM MANAGER	
Weight	35,5-36,1 kg

Dimensions (mm)

Heat Pumps

PBS-i FS2

OUTDOOR UNIT - AWHP MR/TR

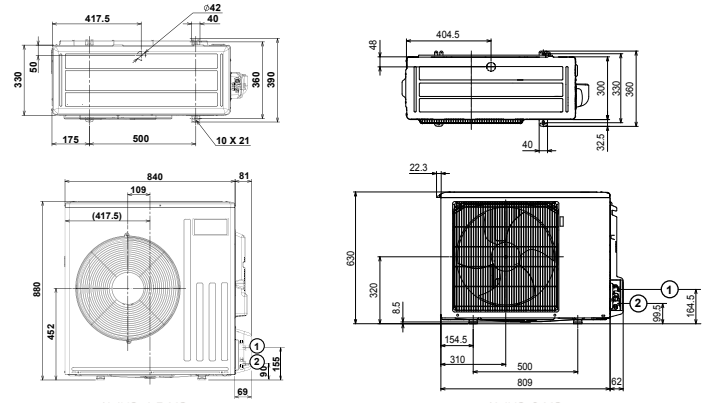

AWHP 4,5 MR
(weight 54 kg)

1	Liquid refrigerant 1/4"
2	Gas refrigerant 1/2"

AWHP 6 MR
(weight 42 kg)

1	Liquid refrigerant 1/4"
2	Gas refrigerant 1/2"

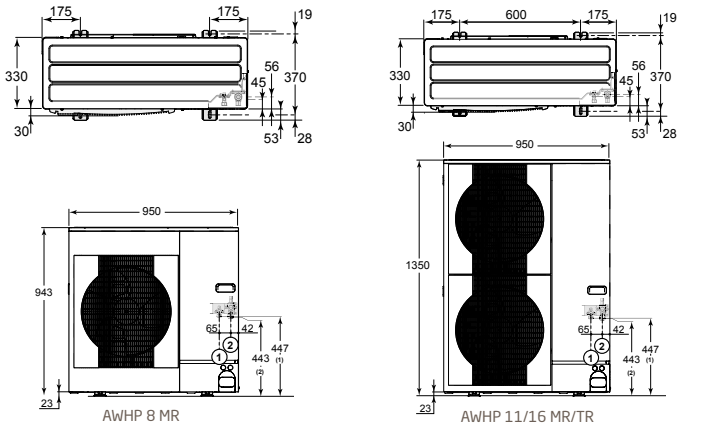

AWHP 8 MR
(weight 75 kg)

1	Liquid refrigerant 3/8"
2	Gas refrigerant 5/8"

AWHP 11/16 MR/TR
(weight 118 kg) MR
(weight 130 kg) TR

1	Liquid refrigerant 3/8"
2	Gas refrigerant 5/8"

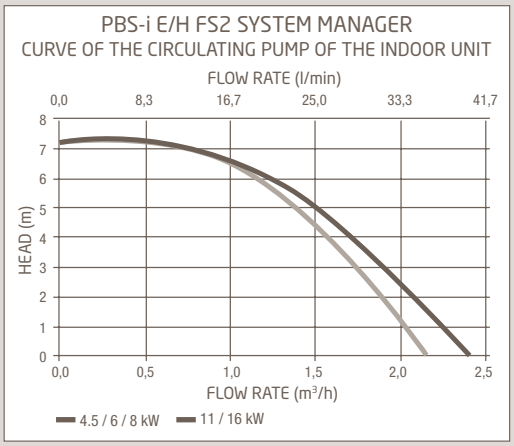

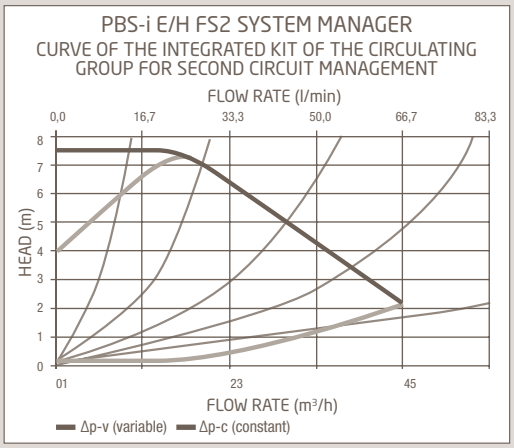

PBS-i FS2

INDOOR UNIT

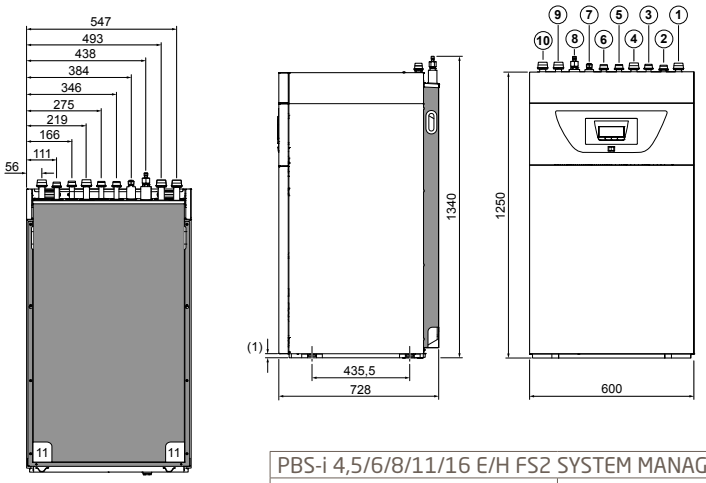

PBS-i 4,5/6/8/11/16 E/H FS2 SYSTEM MANAGER	
Empty weight	139-142 kg
Total weight including water	334-337 kg

Legend

1 Heating flow G 1"
2 Integrative boiler flow G 3/4" (H versions only)
3 Integrative boiler return G 3/4" (H versions only)
4 Heating return G 1"
5 DHW inlet G 3/4"
6 DHW outlet G 3/4"
7 Liquid refrigerant fitting 3/8" – liquid pipes
8 Gas refrigerant fitting 5/8" – gas pipes
9 Second circuit inlet (optional)
10 Second circuit outlet (optional)
11 Condens drain
(1) Adjustable feet

Dimensions (mm)

Heat Pumps

Auriga
5M / 7M / 9M

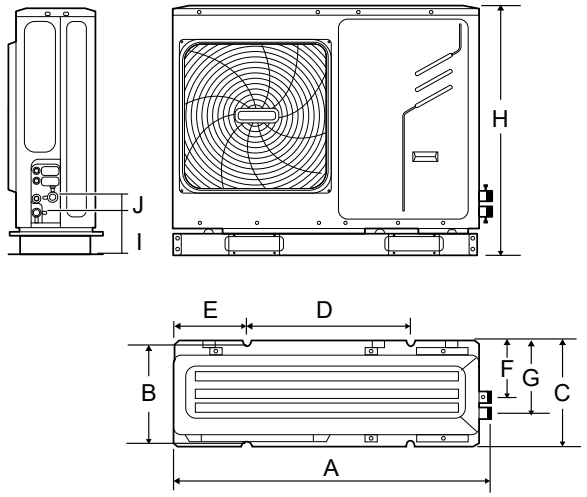

A	B	C	D	E	F	G	H	I	J
1210	374	402	502	404	215	277	945	165	59

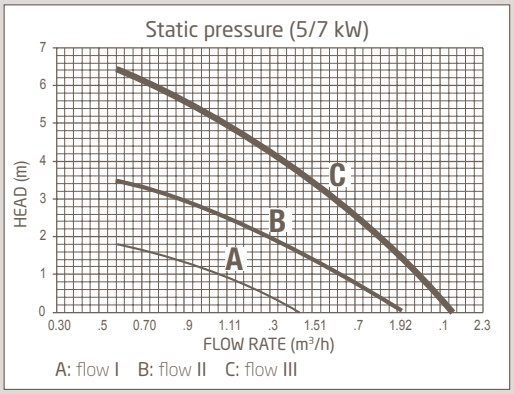

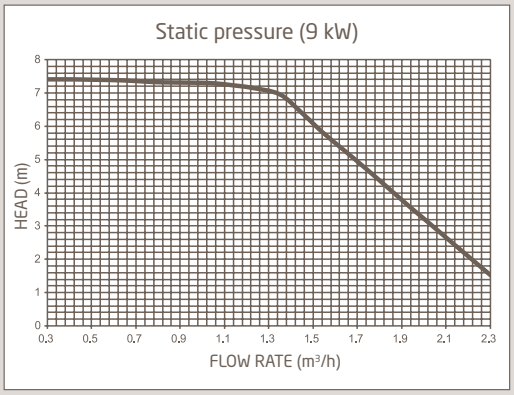

Auriga
12M / 16M / 12T / 16T

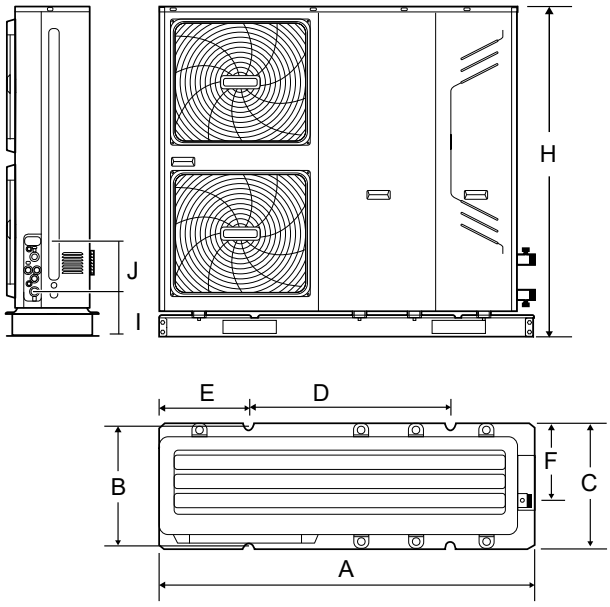

A	B	C	D	E	F	G	H	I	J
1404	373	405	760	361	280	/	1414	176	144

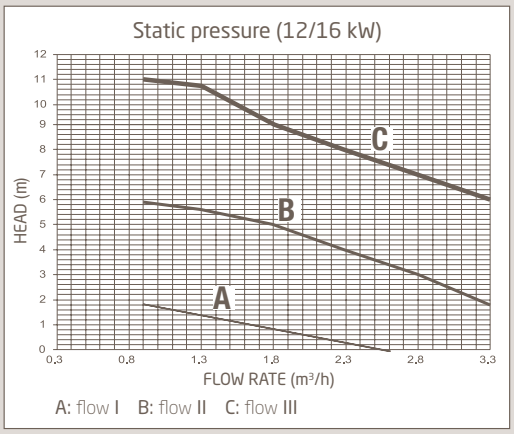

Dimensions (mm)

Buffer tanks for heat pumps

UBHY DC

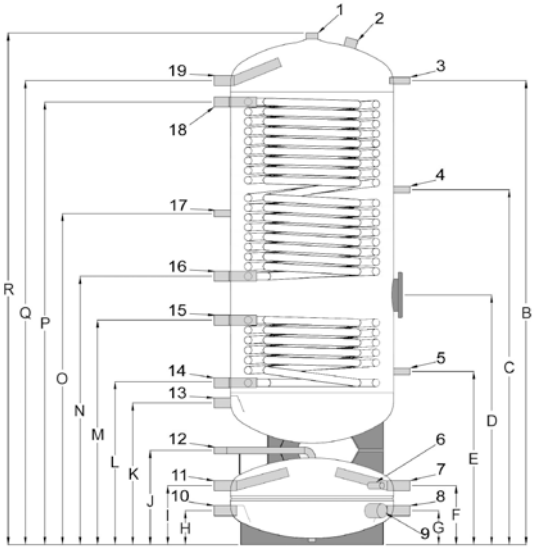

UBHY 500 DC technical drawing

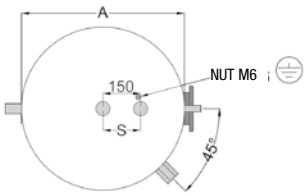

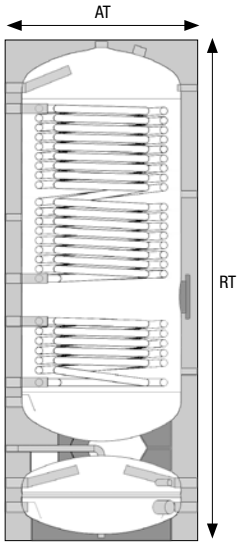

Dimensions
with insulation

Model		UBHY 300 DC	UBHY 500 DC
Dimensions			
A	mm	550	650
AT	mm	690	790
B	mm	1755	1850
C	mm	1420	1415
D	mm	1035	995
E	mm	810	690
F	mm	340	235
G	mm	160	135
H	mm	160	135
I	mm	340	235
J	mm	505	375
K	mm	675	565
L	mm	755	645
M	mm	945	895
N	mm	1125	1070
O	mm	1280	1320
P	mm	1675	1765
Q	mm	1755	1850
R	mm	1925	2040
RT	mm	1925	2040
S	mm	150	150

Legend		
		UBHY 300 DC UBHY 500 DC
1	DHW outlet	1" 1/4
2	Anode	1" 1/4
3	Thermometer - Sensor	1/2"
4	Sensor	1/2"
5	Sensor	1/2"
6	Sensor	1/2"
7	Generator flow	1"
8	Generator return	1"
9	Electrical resistance	1" 1/2
10	Heating return	1"
11	Heating flow	1"
12	Air drain	1/2"
13	Cold water inlet	1"
14	Lower coil inlet	1"
15	Lower coil outlet	1"
16	Upper coil inlet	1"
17	Recirculation	1/2"
18	Upper coil outlet	1"
19	DHW outlet	1"

Dimensions subject to tolerances

Buffer tanks for heat pumps

UBHP SC

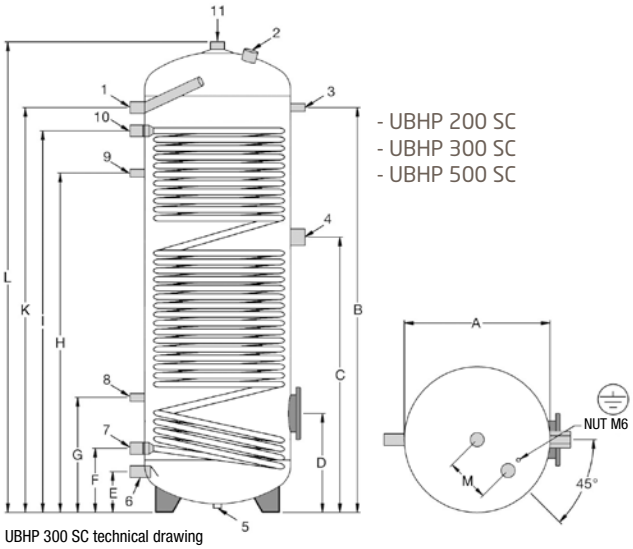

UBHP 300 SC technical drawing

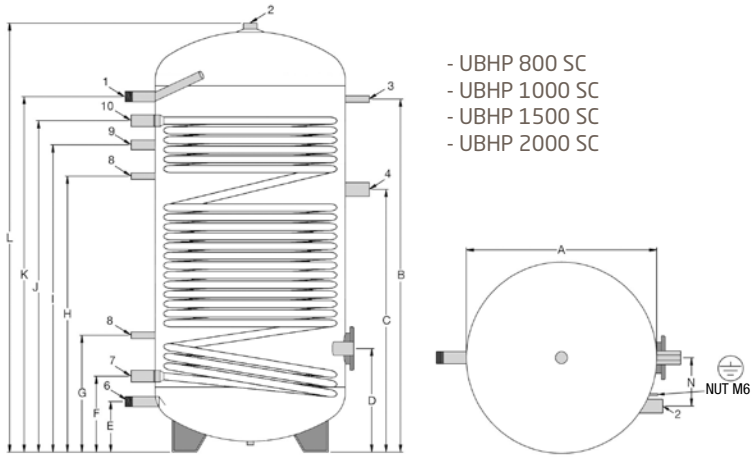

UBHP 2000 SC technical drawing

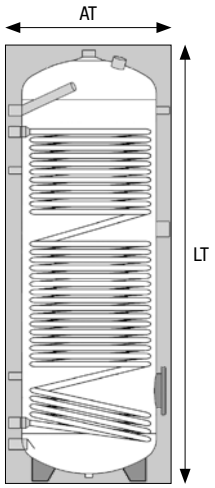

Dimensions
with insulation

Legend

		UBHP 200 SC UBHP 300 SC	UBHP 500 SC	UBHP 800 SC UBHP 1000 SC	UBHP 1500 SC UBHP 2000 SC
1	DHW outlet	1"	1"	1" 1/4	1" 1/2
2	Anode	1" 1/4	1" 1/4	1" 1/2	1" 1/2
3	Thermometer - Sensor	1/2"	1/2"	1/2"	1/2"
4	Electrical resistance	1" 1/2	1" 1/2	1" 1/2	1" 1/2
5	Pallet connection (blinded)	1/2"	1/2"	-	-
6	Water inlet	1"	1"	1" 1/4	1" 1/2
7	Coil inlet	1"	1" 1/4	1" 1/4	1" 1/4
8	Sensor	1/2"	1/2"	1/2"	1/2"
9	Recirculation	1/2"	1/2"	1"	1"
10	Coil outlet	1"	1" 1/4	1" 1/4	1" 1/4
11	DHW outlet	1" 1/4	1" 1/4	-	-

Model		UBHP 200 SC	UBHP 300 SC	UBHP 500 SC	UBHP 800 SC	UBHP 1000 SC	UBHP 1500 SC	UBHP 2000 SC
Dimensions								
A	mm	500	500	650	790	790	1000	1100
AT	mm	640	640	790	990	990	1200	1300
B	mm	995	1390	1425	1610	1940	1720	2110
C	mm	735	945	970	1120	1435	1210	1570
D	mm	320	340	370	470	470	550	550
E	mm	140	140	185	240	240	310	260
F	mm	220	220	270	345	345	425	380
G	mm	370	395	425	565	515	615	580
H	mm	835	1165	1170	1175	1485	1285	1620
I	mm	990	1310	1330	1305	1615	1470	1815
J	mm	-	-	-	1485	1830	1625	2020
K	mm	1070	1390	1415	1610	1940	1770	2140
L	mm	1215	1615	1705	1810	2140	2020	2405
LT	mm	1215	1615	1705	1875	2205	2085	2470
M	mm	150	150	150	-	-	-	-
N	mm	-	-	-	200	200	230	230

Dimensions subject to tolerances

Buffer tanks for heat pumps

UBHP DC

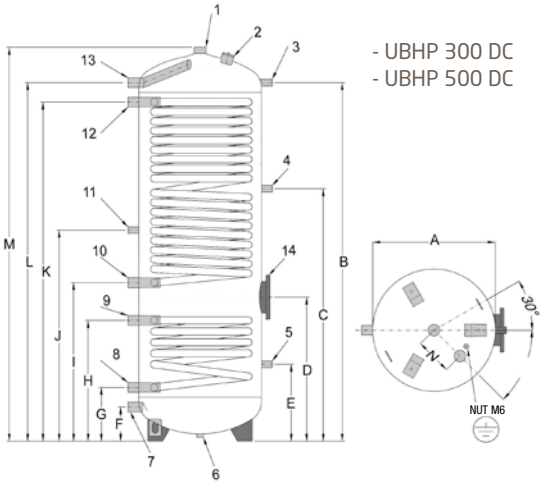

UBHY 300 DC technical drawing

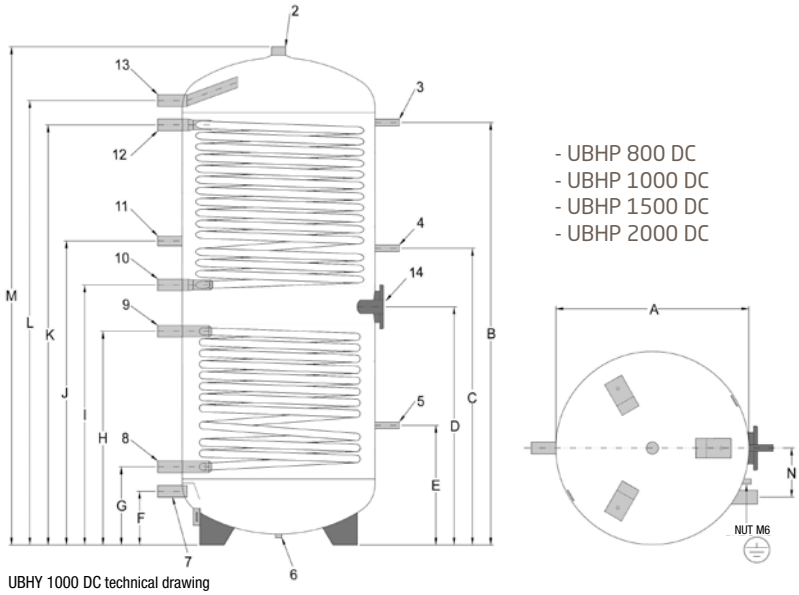

UBHY 1000 DC technical drawing

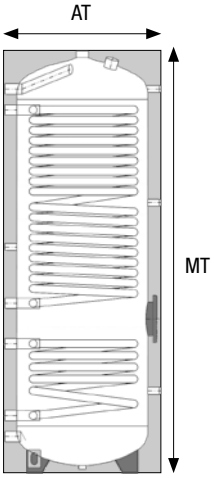

Dimensions
with insulation

Legend

		UBHP 300 DC UBHP 500 DC	UBHP 800 DC UBHP 1000 DC	UBHP 1500 DC UBHP 2000 DC
1	DHW outlet	1" 1/4	-	-
2	Anode	1" 1/4	1" 1/2	1" 1/2
3	Thermometer - Sensor	1/2"	1/2"	1/2"
4	Thermometer	1/2"	1/2"	1/2"
5	Thermometer	1/2"	1/2"	1/2"
6	Pallet connection (blinded)	1/2"	-	-
7	Water inlet	1"	1" 1/4	1" 1/2
8	Lower coil inlet	1"	1" 1/4	1" 1/4
9	Lower coil outlet	1"	1" 1/4	1" 1/4
10	Upper coil inlet	1"	1" 1/4	1" 1/4
11	Recirculation	1/2"	1"	1"
12	Upper coil outlet	1"	1" 1/4	1" 1/4
13	DHW outlet	1"	1" 1/4	1" 1/2
14	Flange with electrical resistance connection	1" 1/2	1" 1/2	1" 1/2

Model		UBHP 300 DC	UBHP 500 DC	UBHP 800 DC	UBHP 1000 DC	UBHP 1500 DC	UBHP 2000 DC
Dimensions							
A	mm	500	650	790	790	1000	1100
AT	mm	640	790	990	990	1200	1300
B	mm	1470	1500	1610	1940	1820	2025
C	mm	1035	1045	1150	1270	1235	1325
D	mm	590	625	840	1005	930	905
E	mm	315	320	540	540	540	515
F	mm	140	185	240	240	280	260
G	mm	220	275	350	350	395	405
H	mm	495	525	725	905	805	875
I	mm	650	700	935	1095	1090	1080
J	mm	865	950	1170	1295	1285	1395
K	mm	1390	1395	1500	1830	1725	1980
L	mm	1470	1495	1610	1940	1860	2140
M	mm	1615	1705	1810	2140	2120	2405
MT	mm	1615	1705	1875	2205	2185	2470
N	mm	150	150	200	200	230	230

Dimensions subject to tolerances

Buffer tanks for heat pumps

UBHP DC-I

- UBHP 300 DC-I
- UBHP 500 DC-I

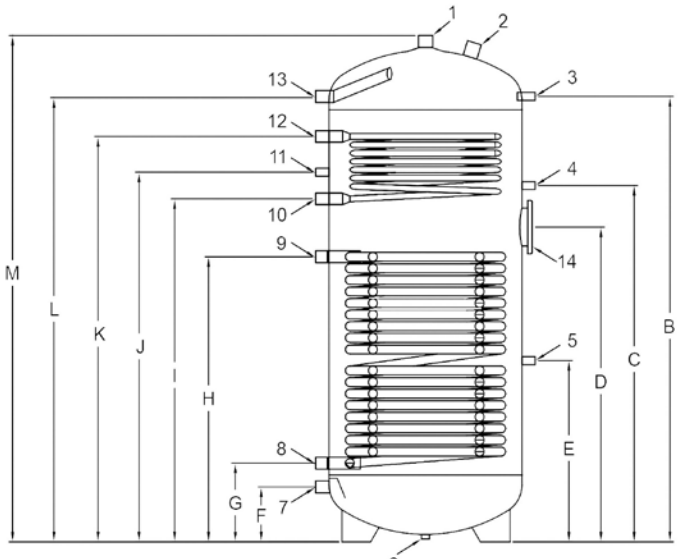

UBHP 500 DC-I technical drawing

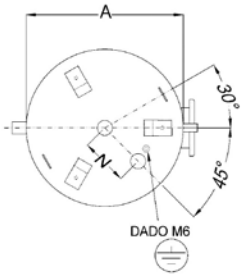

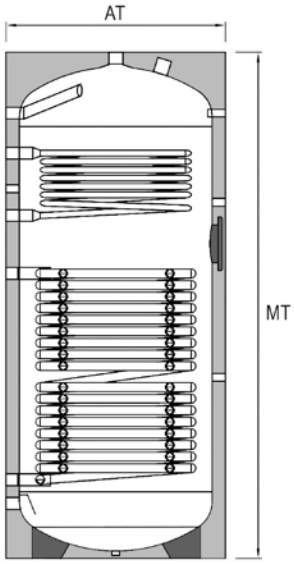

Dimensions
with insulation

Legend		
		UBHP 300 DC-I UBHP 500 DC-I
1	DHW outlet	1" 1/4
2	Anode	1" 1/4
3	Thermometer - Sensor	1/2"
4	Thermostat	1/2"
5	Thermostat	1/2"
6	Pallet connection (blinded)	1/2"
7	Water inlet	1"
8	Lower coil inlet	1"
9	Lower coil outlet	1"
10	Upper coil inlet	1"
11	Recirculation	1/2"
12	Upper coil outlet	1"
13	DHW outlet	1"
14	Electrical resistance connection	1" 1/2

Model		UBHP 300 DC-I	UBHP 500 DC-I
Dimensions			
A	mm	500	650
AT	mm	600	750
B	mm	1470	1500
C	mm	1230	1200
D	mm	1045	1060
E	mm	605	610
F	mm	140	185
G	mm	220	265
H	mm	960	960
I	mm	1180	1155
J	mm	1090	1245
K	mm	1470	1365
L	mm	1470	1500
M	mm	1615	1705
MT	mm	1615	1705
N	mm	150	150

Dimensions subject to tolerances

Buffer tanks for heat pumps

UBPU TC

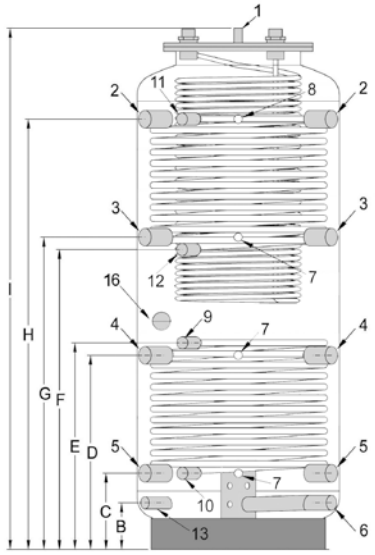

UBPU 500 TC technical drawing

- UBPU 500 TC
- UBPU 800 TC
- UBPU 1000 TC
- UBPU 1500 TC

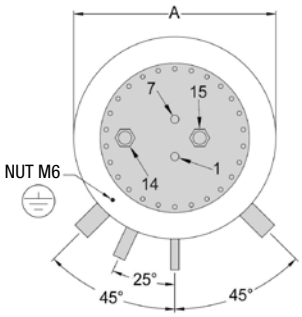

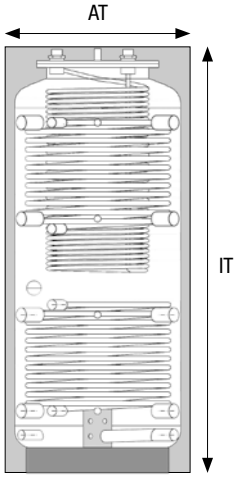

Dimensions
with insulation

Legend			
		UBPU 500 TC	UBPU 800 TC UBPU 1000 TC UBPU 1500 TC
1	Air valve	1/2"	1/2"
2	Boiler flow	1" 1/2	1" 1/2
3	Heating flow	1" 1/2	1" 1/2
4	Boiler-heating return	1" 1/2	1" 1/2
5	Boiler-heating return	1" 1/2	1" 1/2
6	Water return	1" 1/4	1" 1/2
7	Sensor	1/2"	1/2"
8	Thermometer	1/2"	1/2"
9	Solar flow	1"	1"
10	Solar return	1"	1"
11	Alternative energy flow	1"	1"
12	Alternative energy return	1"	1"
13	Drain opening	1"	1"
14	DHW outlet (socket)	1" 1/4	1" 1/4
15	Cold water inlet	1" 1/4	1" 1/4
16	Electrical resistance	1" 1/2	1" 1/2

Model		UBPU 500 TC	UBPU 800 TC	UBPU 1000 TC	UBPU 1500 TC
Dimensions					
A	mm	650	790	790	1000
AT	mm	850	990	990	1200
B	mm	150	170	170	235
C	mm	245	280	280	345
D	mm	625	660	805	805
E	mm	665	640	700	735
F	mm	965	1000	1395	1175
G	mm	1005	1035	1335	1265
H	mm	1385	1410	1860	1725
I	mm	1680	1780	2180	2110
IT	mm	1680	1780	2180	2110

Dimensions subject to tolerances

Buffer tanks for heat pumps

UBPU 25

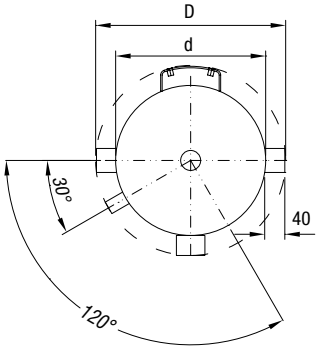

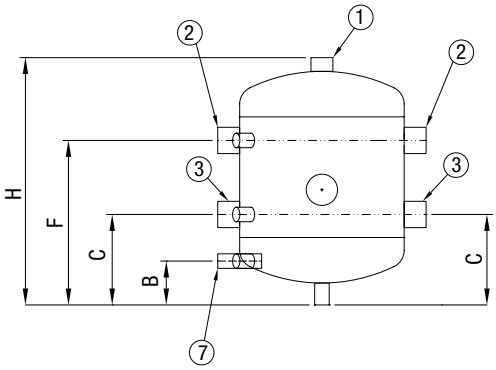

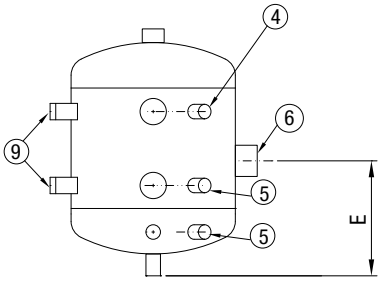

UBPU 50 PLUS
UBPU 100 PLUS
UBPU 300 PLUS

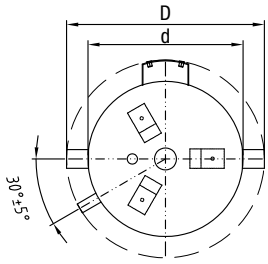

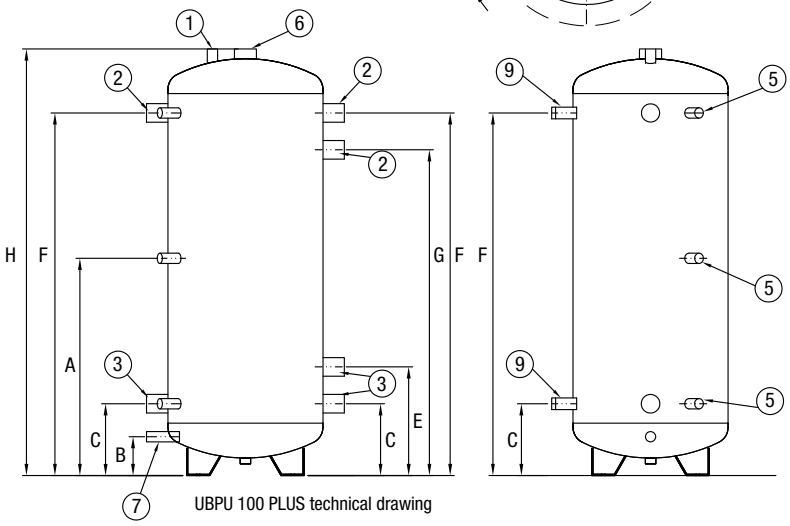

UBPU 100 PLUS technical drawing

Legend					
		UBPU 25	UBPU 50 PLUS	UBPU 100 PLUS	UBPU 300 PLUS
1	Pressure drain	1"	1/2"	1/2"	1/2"
2	Boiler/heating system flow	1" 1/4	1" 1/4	1" 1/4	2"
3	Boiler/heating system return	1" 1/4	1" 1/4	1" 1/4	2"
4	Thermometer	1/2"	1/2"	1/2"	1/2"
5	Sensor	1/2"	1/2"	1/2"	1/2"
6	Electrical resistance	1" 1/2	1" 1/2	1" 1/2	1" 1/2
7	Drain	1/2"	1/2"	1/2"	3/4"
8	Free connection	-	-	-	-
9	Wall hung bracket	YES	YES	YES	-

Model		UBPU 25	UBPU 50 PLUS	UBPU 100 PLUS	UBPU 300 PLUS
Dimensions					
A	mm	-	485	560	785
B	mm	80	100	100	120
C	mm	165	180	185	235
D	mm	380	380	500	600
d	mm	300	300	400	500
E	mm	210	275	280	350
F	mm	300	785	935	1340
G	mm	-	690	840	1225
Height (including insulation)	mm	451	933	1100	1560
H	mm	451	933	1100	1560
Insulation		injected polyurethane	injected polyurethane	injected polyurethane	injected polyurethane
Insulation thickness	mm	45	45	50	50

Buffer tanks for heat pumps

UBPU 500

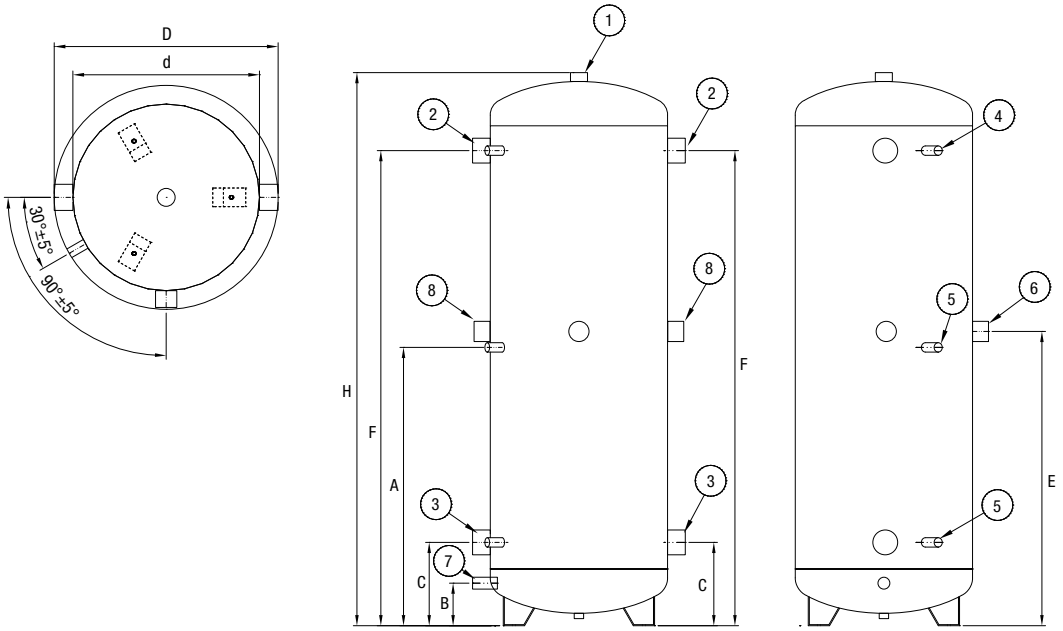

Legend		
		UBPU 500
1	Pressure drain	1" 1/4
2	Boiler/heating system flow	2" 1/2
3	Boiler/heating system return	2" 1/2
4	Thermometer	1/2"
5	Sensor	1/2"
6	Electrical resistance	1" 1/2
7	Drain	3/4"
8	Free connection	2" 1/2

Model		UBPU 500
Dimensions		
A	mm	925
B	mm	135
C	mm	240
D	mm	700
d	mm	600
E	mm	970
F	mm	1610
G	mm	-
Height (including insulation)	mm	1840
H	mm	1840
Insulation		injected polyurethane
Insulation thickness	mm	50

Built-in Heat Pump Systems

CSI IN Split E WI-FI

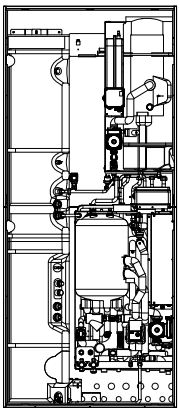

CSI IN Split E 200 WI-FI
(weight 138 kg)

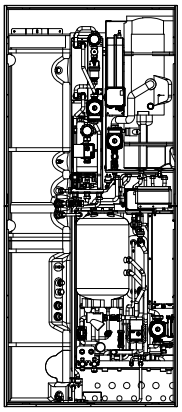

CSI IN Split E 200 WI-FI
with solar module
(available as optional)

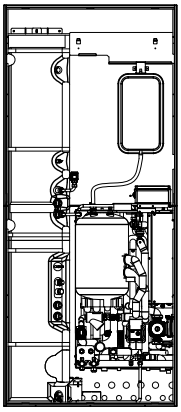

CSI IN Split E WI-FI
(weight 120 kg)

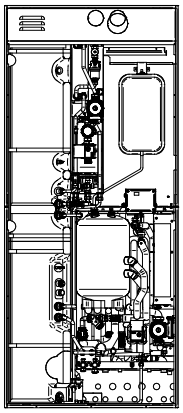

CSI IN Split E WI-FI
with solar module
(available as optional)

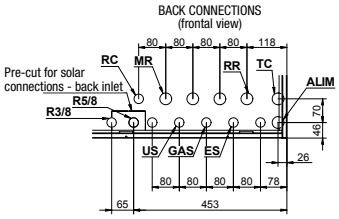

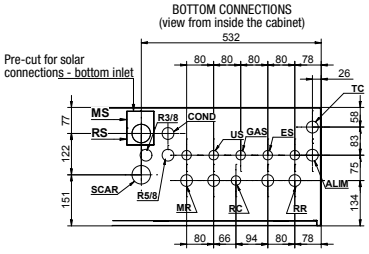

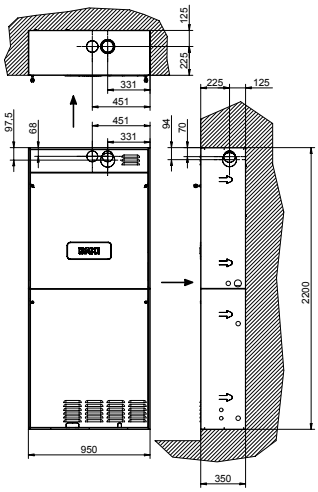

MR	Heating flow G 1"
RR	Heating return G 1"
R5/8	Gas refrigerant fitting G 5/8" (8 - 11 kW units) Gas refrigerant fitting G 5/8" (6 kW units)
R3/8	Liquid refrigerant fitting G 3/8" (8 - 11 kW units) Liquid refrigerant fitting G 1/4" (6 kW units)
SCAR	Safety valve drain
ES	Cold water inlet G 1/2"
US	DHW outlet G 1/2"
ALIM	Power supply
GAS	Gas inlet G 3/4"
COND	Condensate drain
TC	Remote control
RC	DHW reciculation G 1/2"
MS	Pre-cut solar flow G 3/4"
RS	Pre-cut solar return G 3/4"

Dimensions (mm)

Built-in Heat Pump Systems

CSI IN Idro E WI-FI

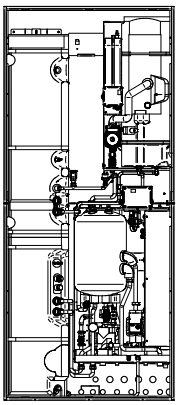

CSI IN Idro E 200 WI-FI
(weight 138 kg)

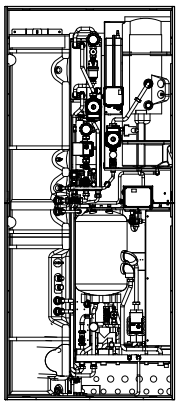

CSI IN Idro E 200 WI-FI
with solar module
(available as optional)

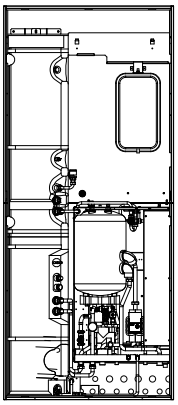

CSI IN Idro E WI-FI
(weight 120 kg)

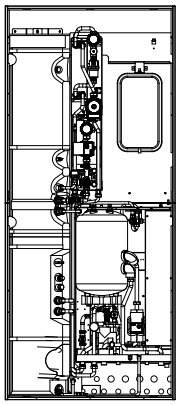

CSI IN Idro E WI-FI
with solar module
(available as optional)

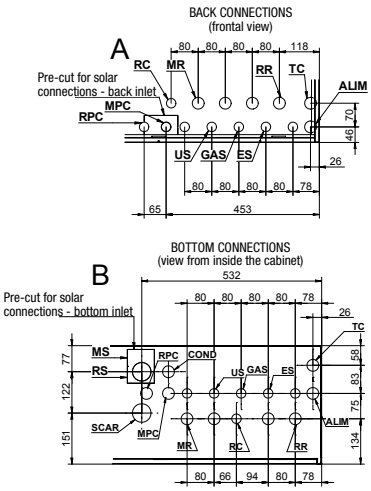

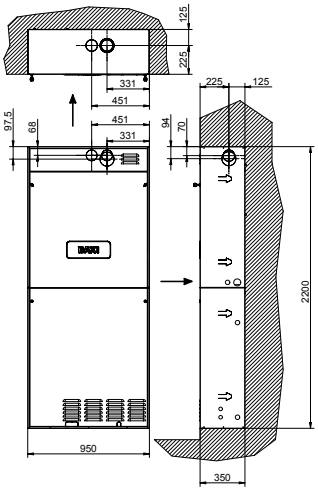

MR	Heating flow G 1"
RR	Heating return G 1"
MCP	Pump flow G 1"
RPC	Pump return G 1"
SCAR	Safety valve drain
ES	Cold water inlet G 1/2"
US	DHW outlet G 1/2"
ALIM	Power supply
GAS	Gas inlet G 3/4"
COND	Condensate drain
TC	Remote control
RC	DHW reciculation G 1/2"
MS	Pre-cut solar flow G 3/4"
RS	Pre-cut solar return G 3/4"

Dimensions (mm)

Built-in Heat Pump Systems

CSI IN Split E WI-FI
CSI IN Idro E WI-FI

TECHNICAL CABINET

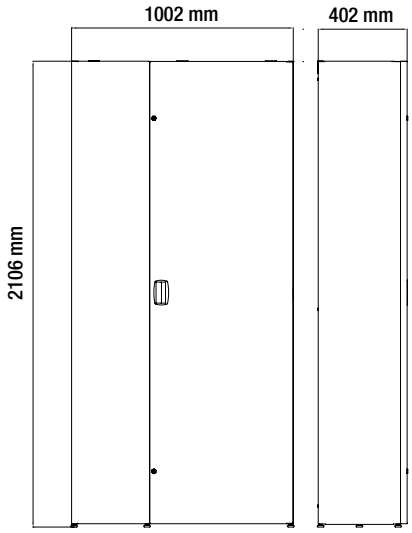

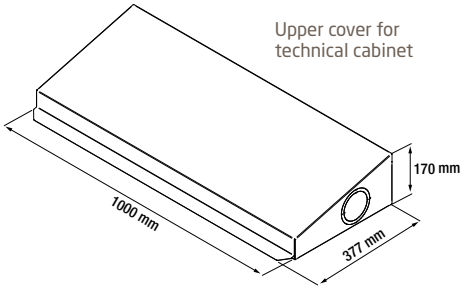

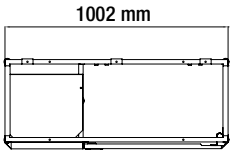

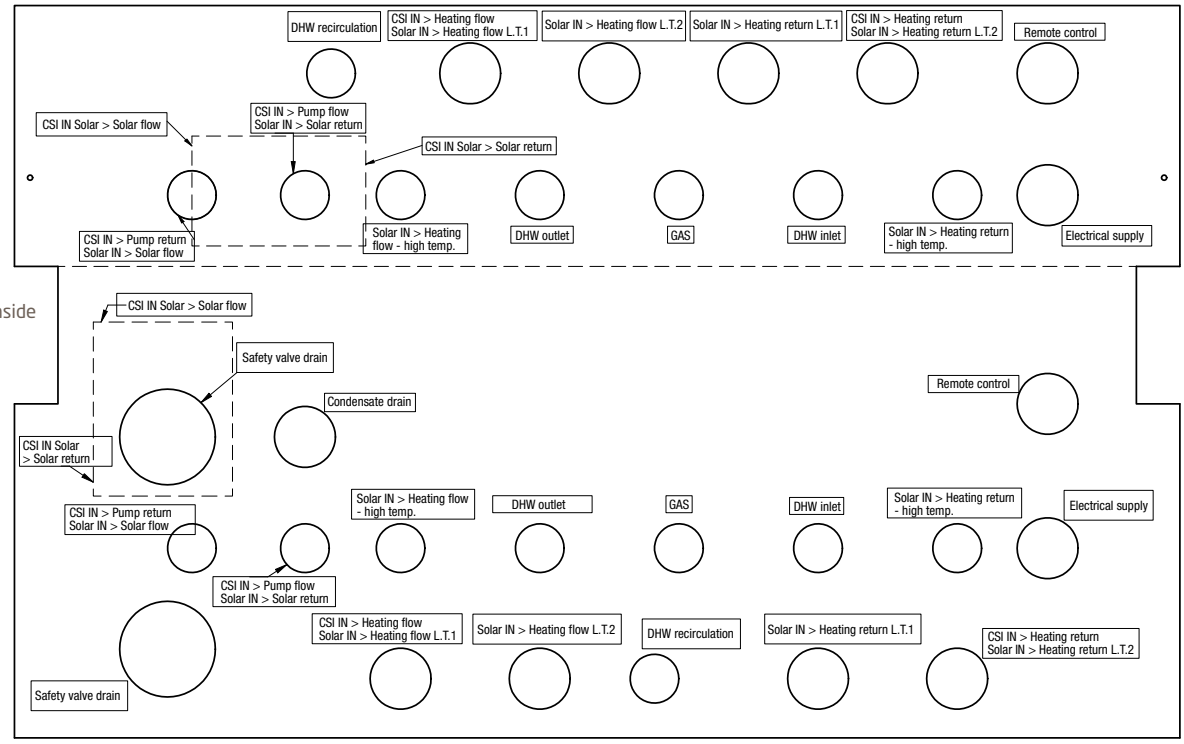

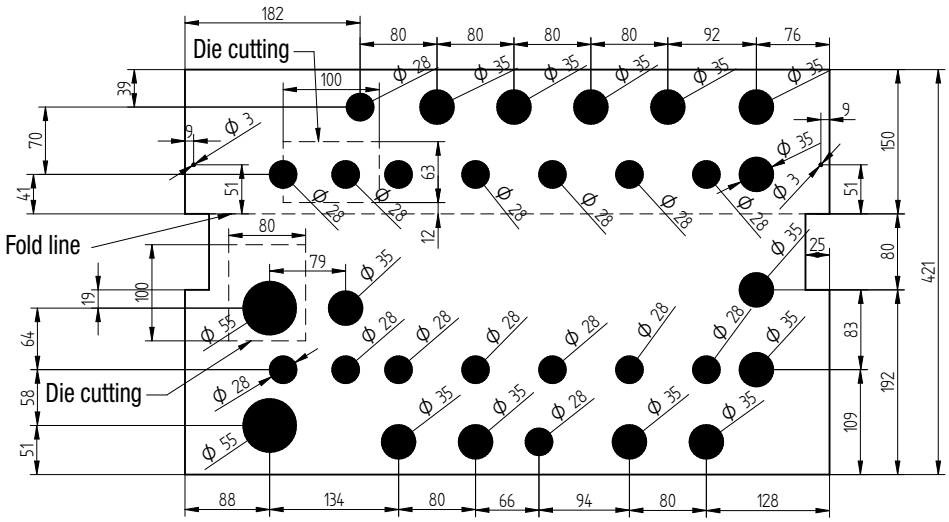

Dimensions (mm)

Built-in Heat Pump Systems

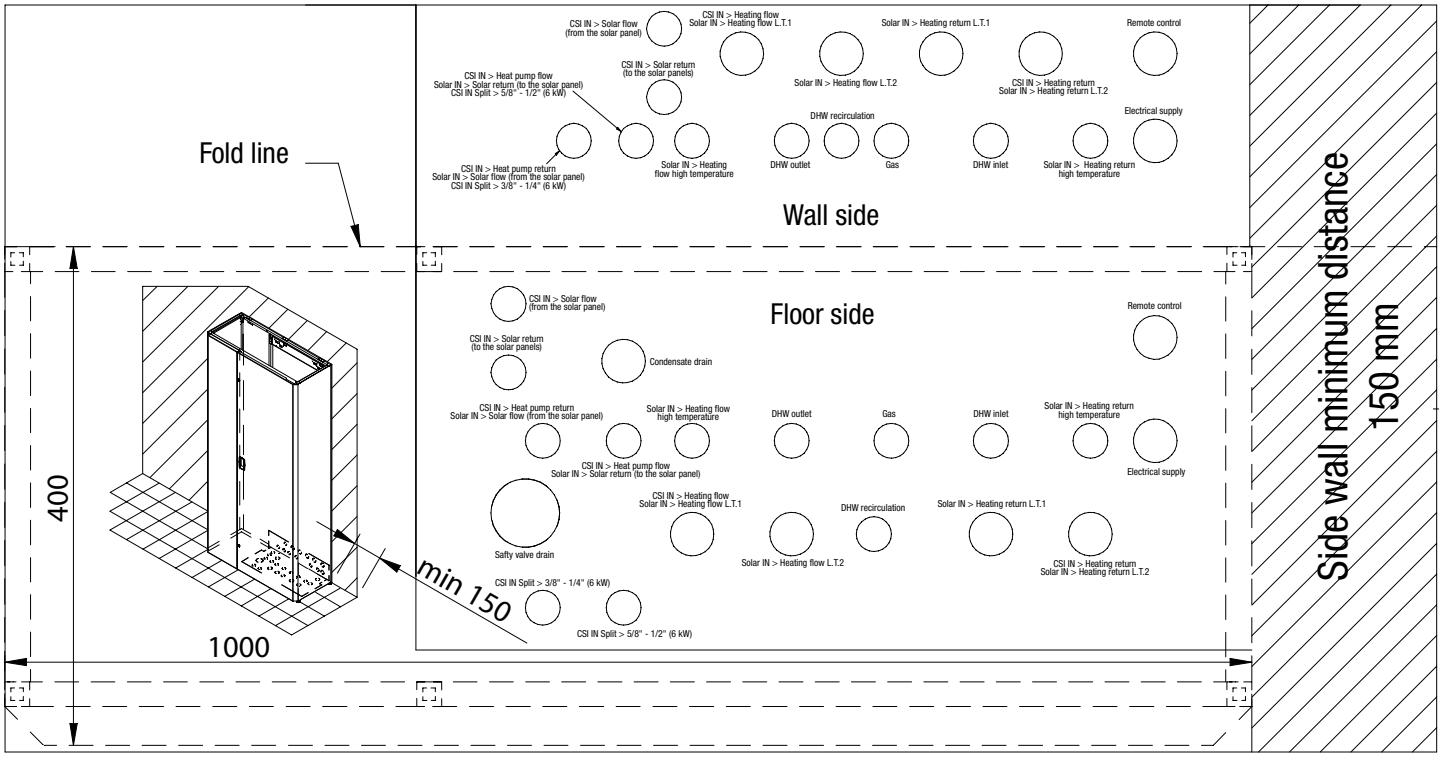

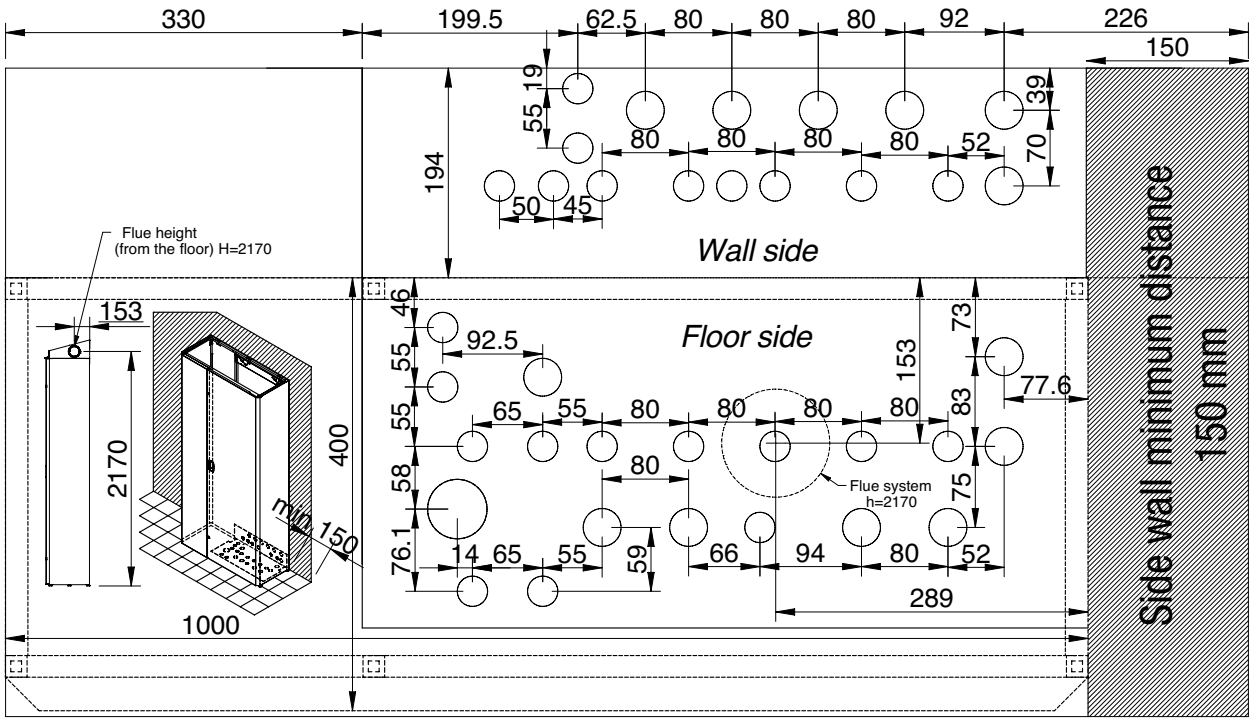

Dimensions (mm)

Fan Coil

IQWH20
IQWH30

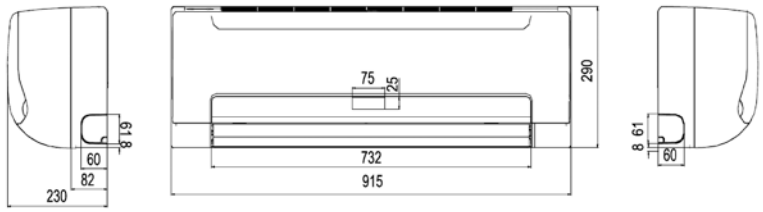

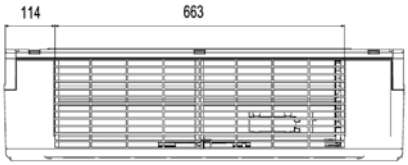

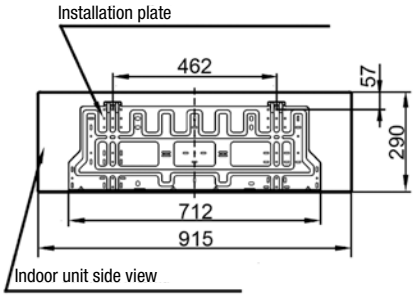

IQWH40

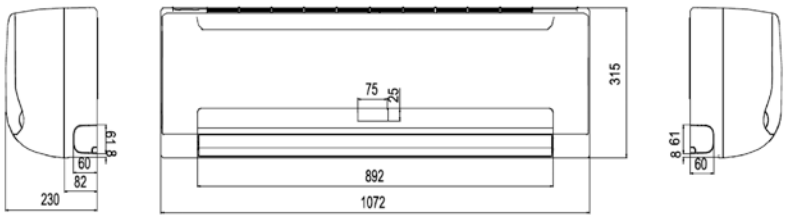

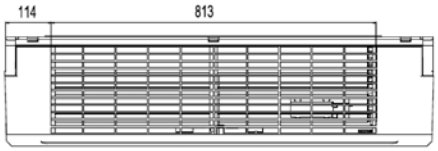

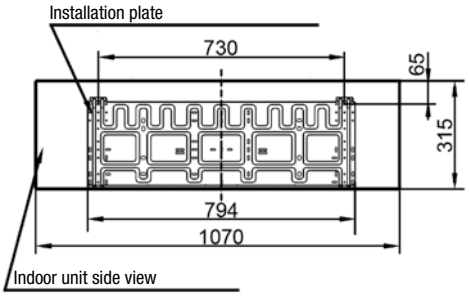

Dimensions (mm)

Fan Coil

IQF

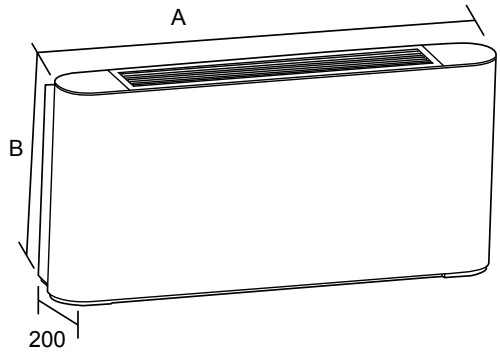

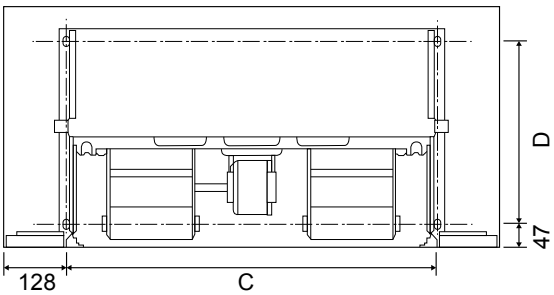

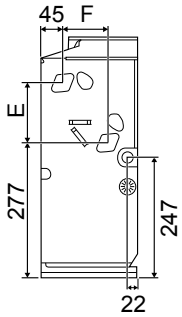

Model		IQF20	IQF35 IQF45	IQF60	IQF70
Dimensions					
A	mm	1020	1240	1360	1360
B	mm	495	495	495	591
C	mm	764	984	1104	1104
D	mm	375	375	375	391
E	mm	123	123	123	219
F	mm	93	93	93	102

Dimensions (mm)

Fan Coil

IQK30-40

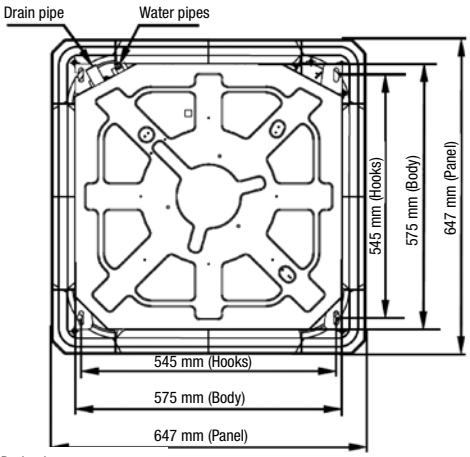

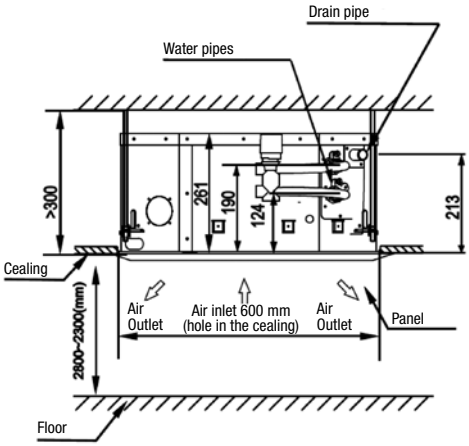

PANEL

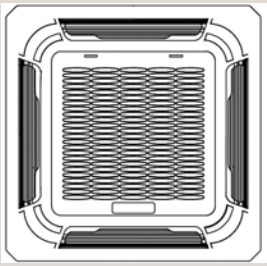

Model		IQKP30/40	IQKP 60-70-110
Dimensions			
H	mm	50	45

IQK60-70-110

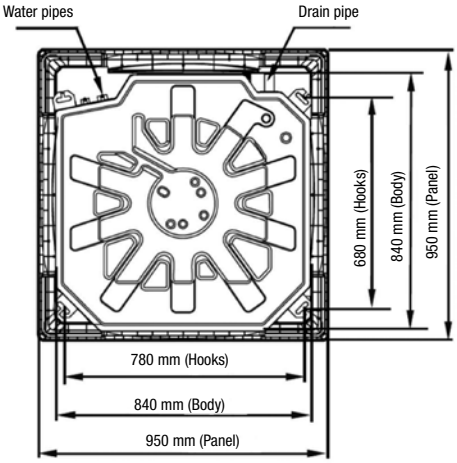

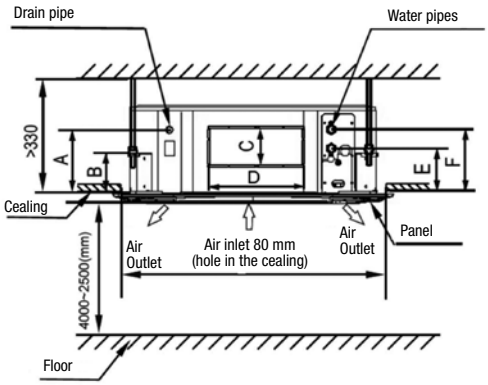

Model		IQK60	IQK70-110
Dimensions			
A	mm	180	180
B	mm	140	140
C	mm	85	155
D	mm	350	350
E	mm	145	155
F	mm	195	205

Fan Coil

IQD

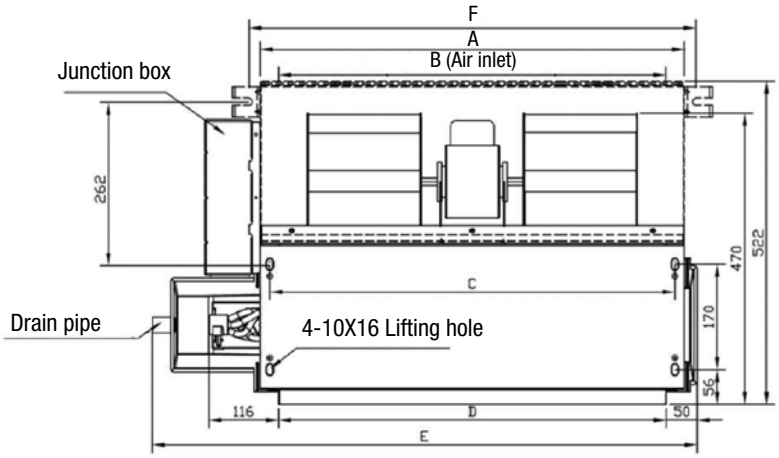

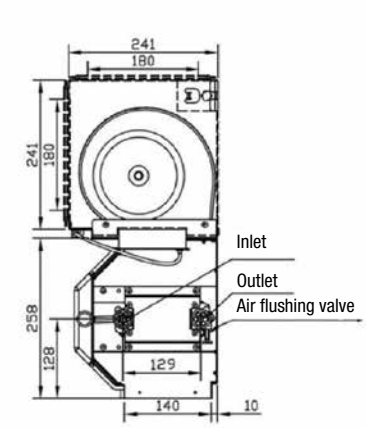

Model		IQD30	IQD50	IQD60	IQD80	IQD110
Dimensions						
A	mm	645	745	965	1265	1660
B	mm	585	685	905	1205	1600
C	mm	613	713	933	1233	1628
D	mm	585	685	905	1205	1600
E	mm	841	941	1161	1461	1856
F	mm	683	783	1003	1303	1698

Dimensions (mm)

Forced collectors

SOL 250-V

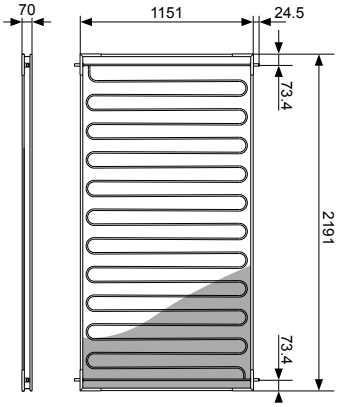

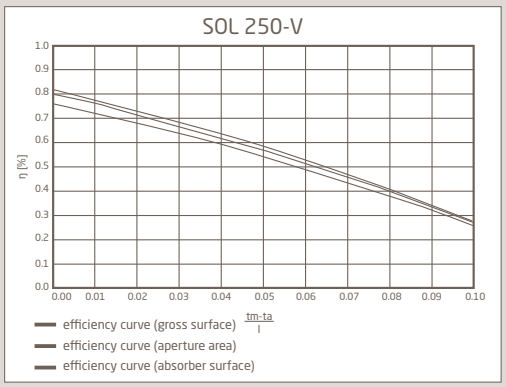

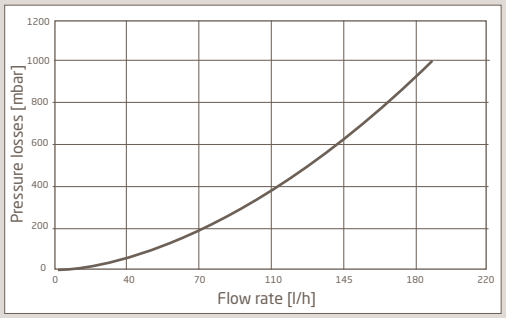

I = total incidental radiation on the collector surface (W/m²)
tm = absorbing surface average temperature (°C)
ta = room temperature (°C)

SOL 250-O

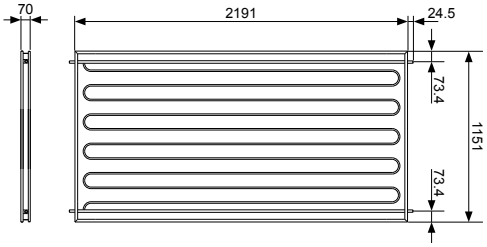

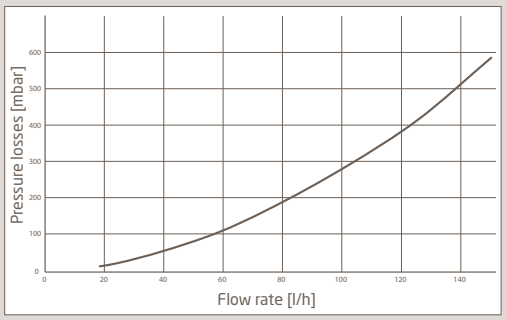

SOL 200-V

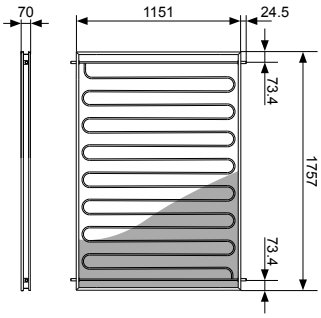

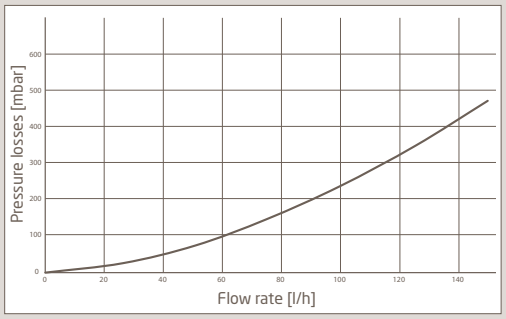

Dimensions (mm)

Thermosyphon systems

STS+

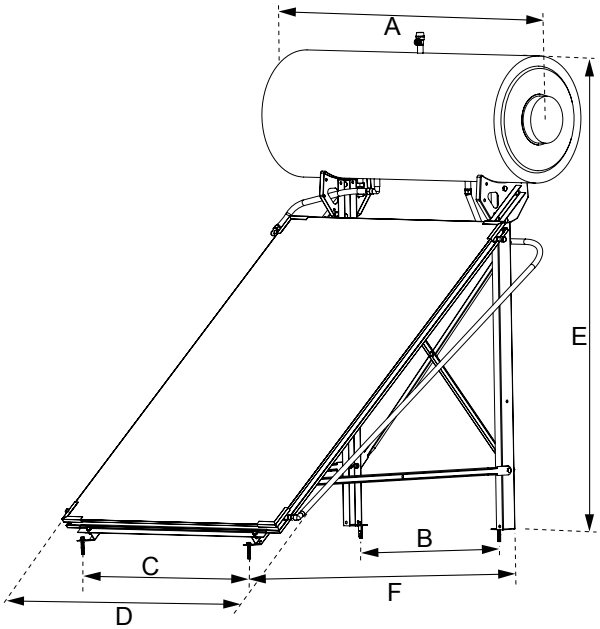

A-frame installation

		STS+ 150-2.0	STS+ 150-2.5	STS+ 200-2.0	STS+ 200-2.5	STS+ 300-2.0	STS+ 300-2.5
A	mm	1310	1310	1310	1310	2060	2060
B	mm	752	752	752	752	1294	1294
C	mm	895	895	895	895	1439	1439
D	mm	1260	1260	1260	1260	2505	2505
E	mm	1870	1870	1907	1907	1907	1907
F	mm	1551	2073	1551	2073	1551	2073

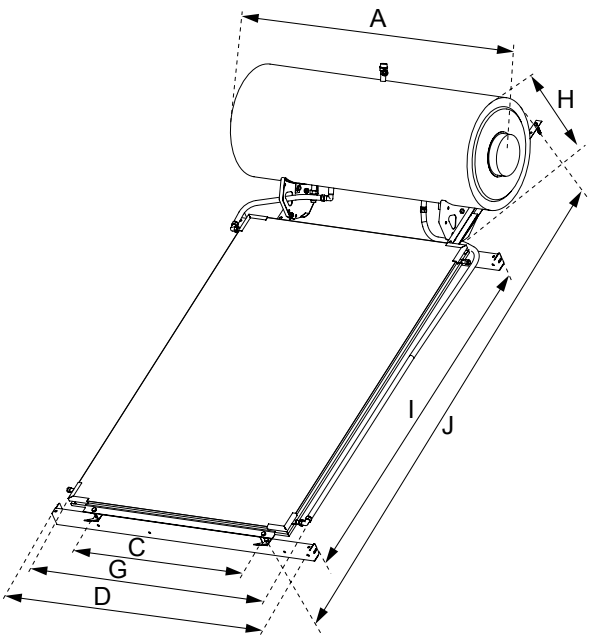

On-roof installation

		STS+ 150-2.0	STS+ 150-2.5	STS+ 200-2.0	STS+ 200-2.5	STS+ 300-2.0	STS+ 300-2.5
A	mm	1310	1310	1310	1310	2060	2060
C	mm	895	895	895	895	1436	1436
D	mm	1464	1464	1464	1464	1464	1464
G	mm	1265	1265	1265	1265	2500	2500
H	mm	770	770	810	810	810	810
I	mm	1790	2223	1790	2223	1790	2223
J	mm	2520	2831	2560	2871	2560	2871

Solar tanks

UBVT 200 DC/SC
UBVT 300 DC/SC
UBVT 400 DC/SC
UBVT 500 DC

1 Domestic hot water outlet G1
2 Recirculation G¾
3 Coil inlet G1
4 Domestic hot water sensor G1
5 Coil outlet G1
6 Domestic cold water inlet
+ Drain opening G1
7 Solar coil inlet G1
8 Solar coil outlet G1
9 Solar sensor positioning
10 Electrical resistance seat G1 1/2"
11 Magnesium anode Ø 33 mm
12 Thermometer

200 SC - 300 SC - 400 SC

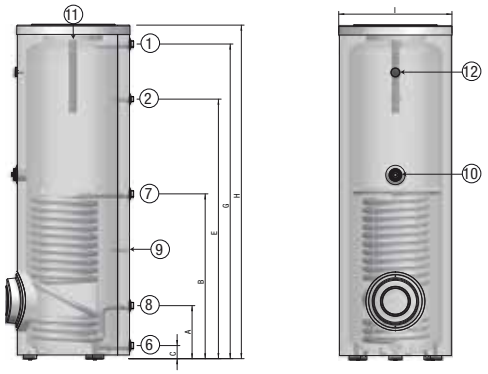

		UBVT 200 SC	UBVT 300 SC	UBVT 400 SC
A	mm	287	286	304
B	mm	753	887	858
C	mm	70.5	70.5	66.3
E	mm	1080	1397	1214
G	mm	1323.5	1694	1560
H	mm	1422.5	1795.5	1671.5
I (Ø)	mm	610	610	710
Insulation		injected polyurethane		
Insulation thickness	mm	50	50	50

200 DC - 300 DC - 400 DC - 500 DC

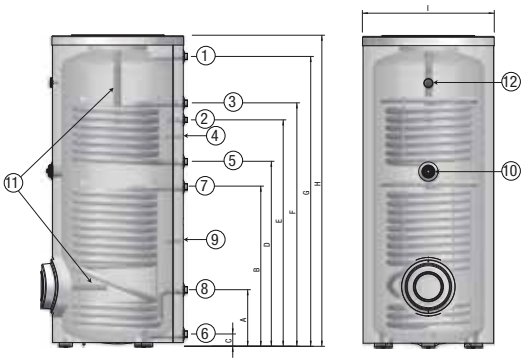

		UBVT 200 DC	UBVT 300 DC	UBVT 400 DC	UBVT 500 DC
A	mm	287	286	304	302,6
B	mm	753	887	858	948
C	mm	70,5	70,5	66,3	71
D	mm	900	1127	994	1133
E	mm	1080	1397	1219	1358
F	mm	1170	1487	1309	1448
G	mm	1323,5	1694	1560	1665,7
H	mm	1422,5	1795,5	1671,5	1787
I (Ø)	mm	610	610	710	760
Insulation		injected polyurethane			
Insulation thickness	mm	50	50	50	50

UBSI 300
UBSI 500

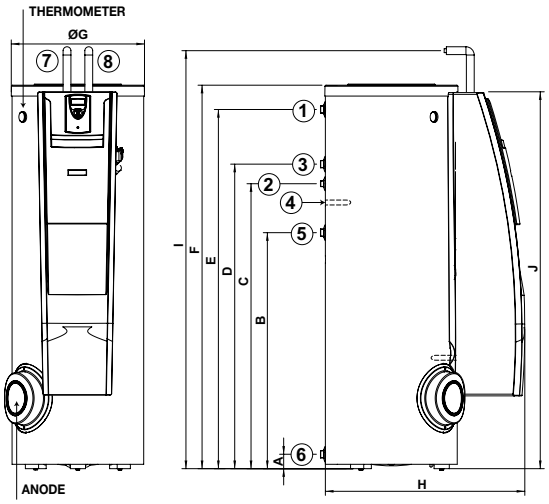

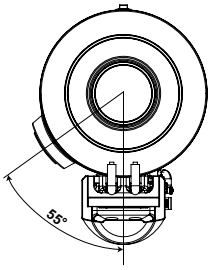

1 DHW outlet 1"
2 Recirculation 3/4"
3 Upper coil outlet 1"
4 Sensor
5 Upper coil inlet 1"
6 Cold water inlet 1"
7 Lower coil outlet 3/4"
8 Lower coil inlet 3/4"

Model		UBSI 300	UBSI 500
Capacity	lt	300	500
A	mm	71	71
B	mm	1127	1133
C	mm	1397	1358
D	mm	1487	1448
E	mm	1694	1666
F	mm	1796	1812
G (Ø)	mm	604	804
H	mm	922	1069
I	mm	1898	1983
Insulation		injected polyurethane	
Insulation thickness	mm	50	50
Anode		magnesium anode	

Solar tanks

UB 800 DC
UB 1000 DC
UB 1500 DC
UB 2000 DC

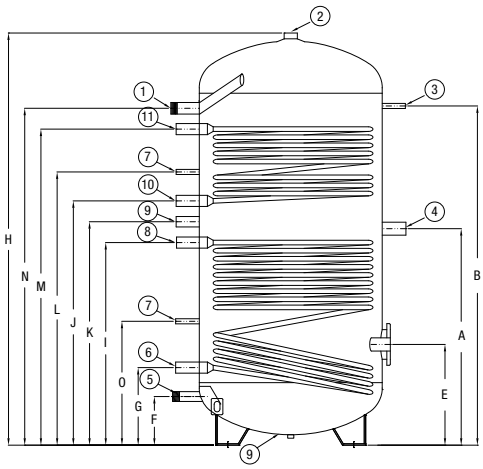

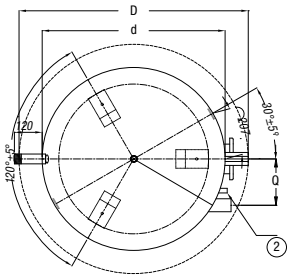

		UB 800 DC UB 1000 DC	UB 1500 DC UB 2000 DC
1	DHW outlet	1" 1/4	1" 1/2
2	Anode	1" 1/2	1" 1/2
3	Thermometer	1/2"	1/2"
4	Electric resistance	1" 1/2	1" 1/2
5	Cold water inlet	1" 1/4	1" 1/2
6	Lower coil outlet	1" 1/4	1" 1/4
7	Sensor	1/2"	1/2"
8	Lower coil inlet	1" 1/4	1" 1/4
9	Recirculation	1"	1"
10	Upper coil outlet	1" 1/4	1" 1/4
11	Upper coil inlet	1" 1/4	1" 1/4

Model		UB 800 DC	UB 1000 DC	UB 1500 DC	UB 2000 DC
Dimensions					
A	mm	935	1085	1200	1340
B	mm	1465	1720	1770	2000
E	mm	435	440	500	550
F	mm	210	210	260	260
G	mm	335	350	385	400
I	mm	875	985	1095	1205
J	mm	1055	1245	1275	1425
K	mm	965	1120	1185	1315
L	mm	1180	1395	1370	1485
M	mm	1365	1560	1680	1870
N	mm	1455	1700	1820	1990
O	mm	535	510	495	660
Q	mm	200	200	230	230
d	mm	790	790	1000	1100
Heigth (including insulation)	mm	1855	2105	2185	2470
H	mm	1780	2030	2070	2405
D	mm	990	990	1200	1300
Flange	mm	180/120		290/220	
Insulation		soft polyurethane	soft polyurethane	soft polyurethane	soft polyurethane
Insulation thickness	mm	100	100	100	100

Solar tanks

UBTT 300

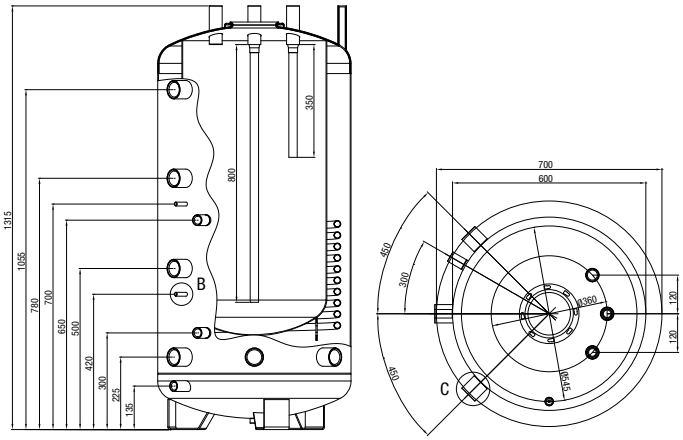

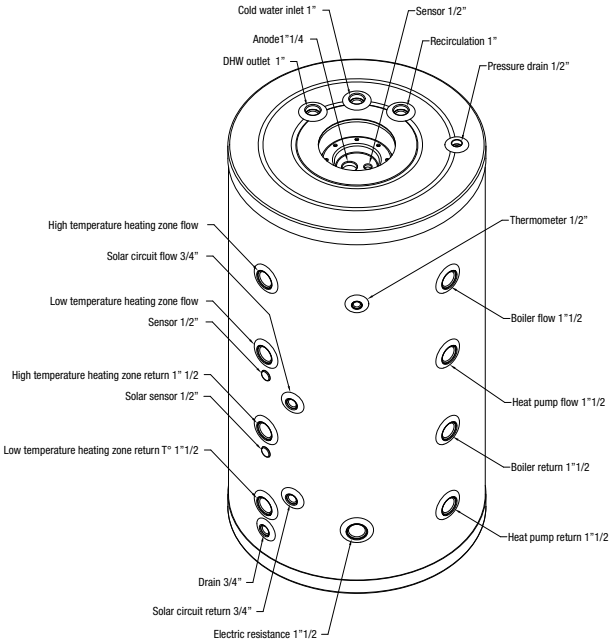

UBTT 600

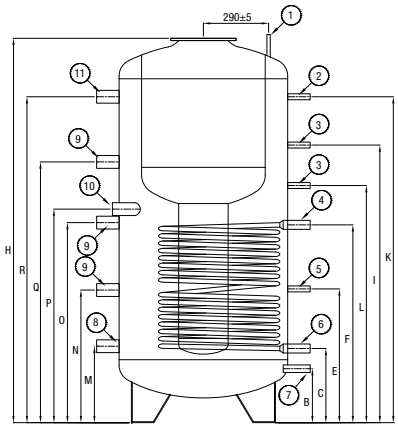

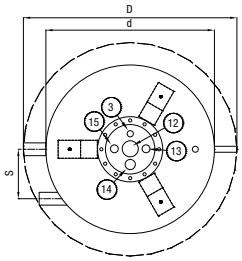

		UBTT 300	UBTT 600
Dimensions			
Capacity (DHW)	lt	140	170
B	mm	135	240
C	mm	300	330
E	mm	420	595
F	mm	650	880
I	mm	-	1235
K	mm	1055	1450
L	mm	700	1055
M	mm	225	340
N	mm	500	590
O	mm	780	890
P	mm	225	950
Q	mm	-	1160
R	mm	1055	1450
S	mm	-	220
d	mm	600	750
Heigth (including insulation)	mm	1315	1775
H	mm	1315	1710
D	mm	700	950
Flange	mm	120	290/220
Insulation		injected polyurethane	soft polyurethane
Insulation thickness	mm	50	100

1 Pressure drain 1/2"
2 Thermometer 1/2"
3 Sensor 1/2"
4 Solar circuit flow 1"
5 Solar sensor 1/2"
6 Solar circuit return 1"
7 Drain 3/4"
8 Heating circuit return 1 1/2"
9 Free connection 1 1/2"
10 Electrical resistance 1 1/2"
11 Heating circuit flow 1 1/2"
12 Cold water inlet 1"
13 Recirculation 1"
14 Anode 1 1/4"
15 DHW outlet 1"

Electric water heaters

STORAGE
horizontal 80/100 lt

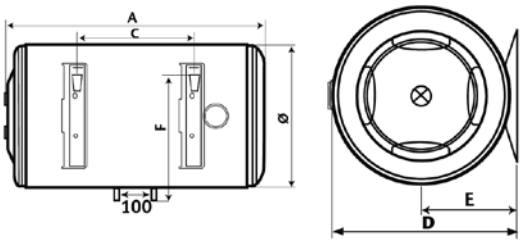

	Capacity	A/H	Ø	B	C	D
V 530	30	623	338	-	423	350
V 550	50	610	433	-	380	451
V 580	80	854	433	-	585	451
V 510	100	1018	433	-	785	451
O 580	80	854	433	-	395	451
O 510	100	1018	433	-	555	451
V 580 TD	80	854	433	-	585	451
V 510 TD	100	1018	433	-	785	451
V 580 TS	80	854	433	-	585	451
V 510 TS	100	1018	433	-	785	451

upright 30/50/80/100 lt

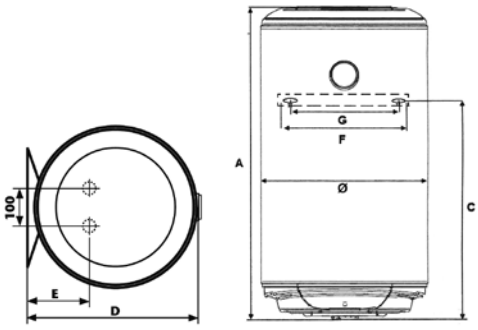

	E	F	G
V 530	86	100/320	240/272
V 550	165	100/320	240/272
V 580	165	100/320	240/272
V 510	165	100/320	240/272
O 580	234	365	240/272
O 510	234	365	240/272
V 580 TD	165	100/320	240/272
V 510 TD	165	100/320	240/272
V 580 TS	165	100/320	240/272
V 510 TS	165	100/320	240/272

dimensions (mm)

Dimensions (mm)

Gas water heaters

Sag 50 Blue
Sag 80 Blue
Sag 100 Blue

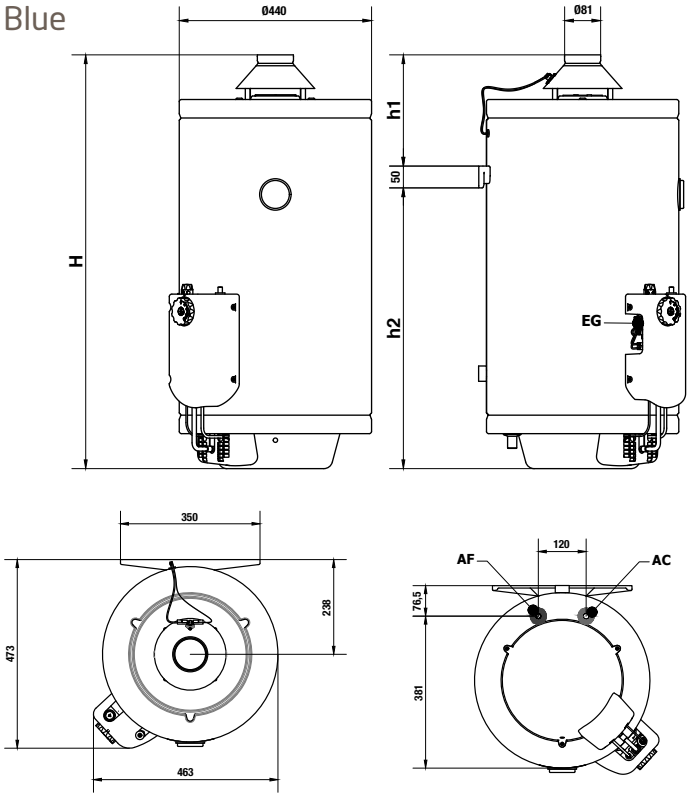

Legend	
AF	Cold water inlet 1/2"
AC	Hot water inlet 1/2"
EG	Gas inlet 1/2"

		Sag 50 Blue	Sag 80 Blue	Sag 100 Blue
H	mm	730	945	1110
h1	mm	260	255	245
h2	mm	420	640	815

Sag 190T Blue

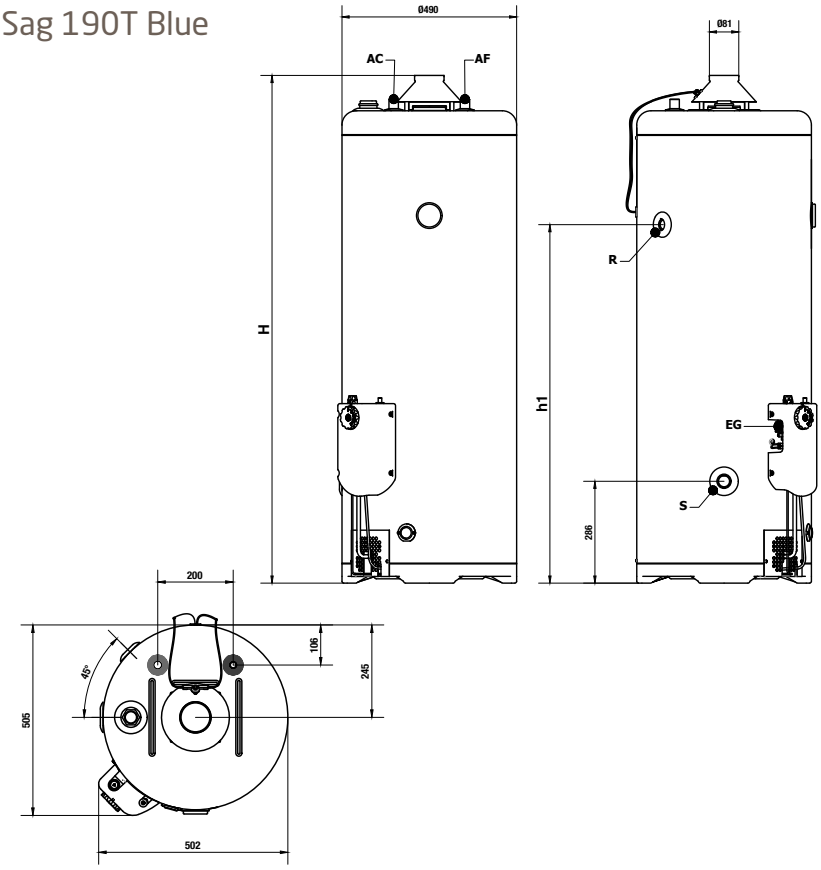

Legend	
AF	Cold water inlet 3/4"
AC	Hot water inlet 3/4"
EG	Gas inlet 1/2"
S	Drain 1"
R	Recirculation 3/4"

		Sag 190T Blue
H	mm	1674
h1	mm	1256

Gas water heaters

Sag 300T Blue

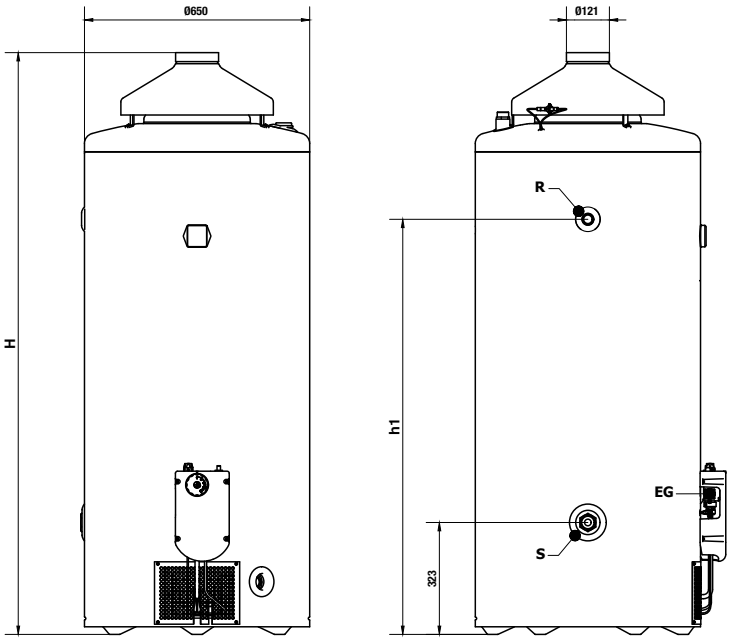

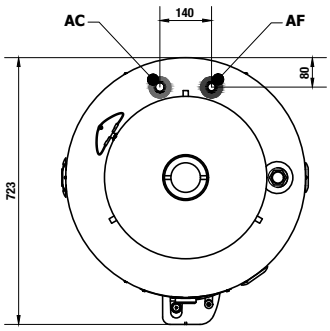

Legend	
AF	Cold water inlet 1"
AC	Hot water inlet 1"
EG	Gas inlet 1/2"
S	Drain 1/2"
R	Recirculation 3/4"

		Sag 300T Blue
H	mm	1679
h1	mm	1198

Gas water heaters

Sag3 50 - 80 - 100

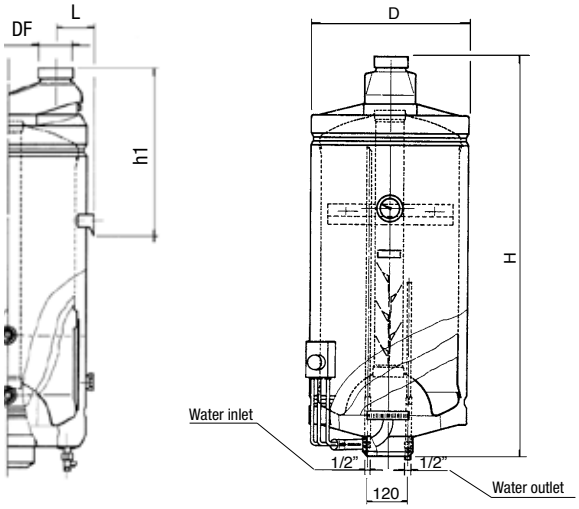

MODEL		Sag3 50	Sag3 80	Sag3 100
D	mm	440	440	440
H	mm	755	960	1130
h1	mm	340	325	325
L	mm	116	116	116
DF	mm	80	80	80

Sag3 115 T - 150 T - 190 T

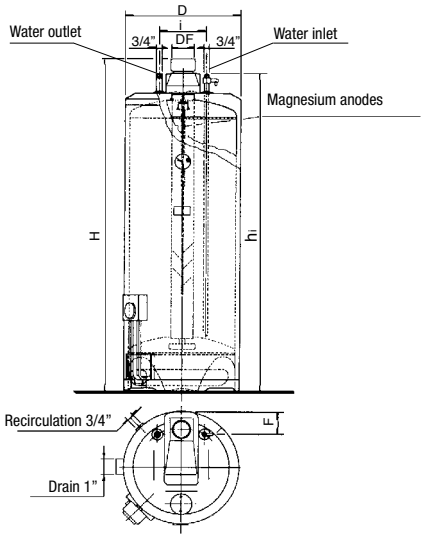

MODEL		Sag3 115 T	Sag3 150 T	Sag3 190 T
D	mm	490	490	490
H	mm	1150	1400	1650
h1	mm	1105	1355	1605
i	mm	200	201	200
F	mm	106	106	106
DF	mm	80	80	80

Sag3 300 T

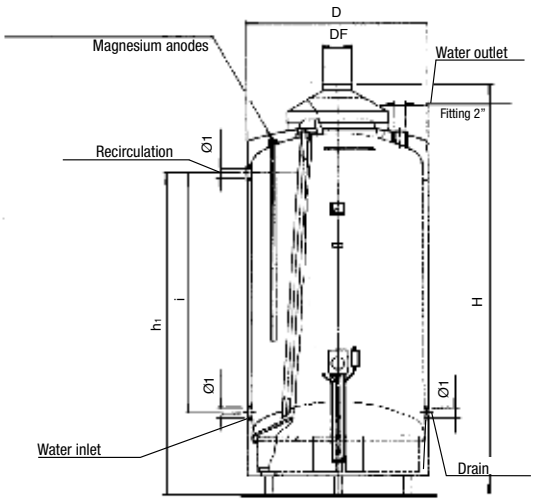

MODEL		Sag3 300 T
D	mm	650
H	mm	1685
h1	mm	1660
i	mm	140
DF	mm	120

Gas instantaneous water heaters

Acquaprojet Blue
11i Blue, 14i Blue

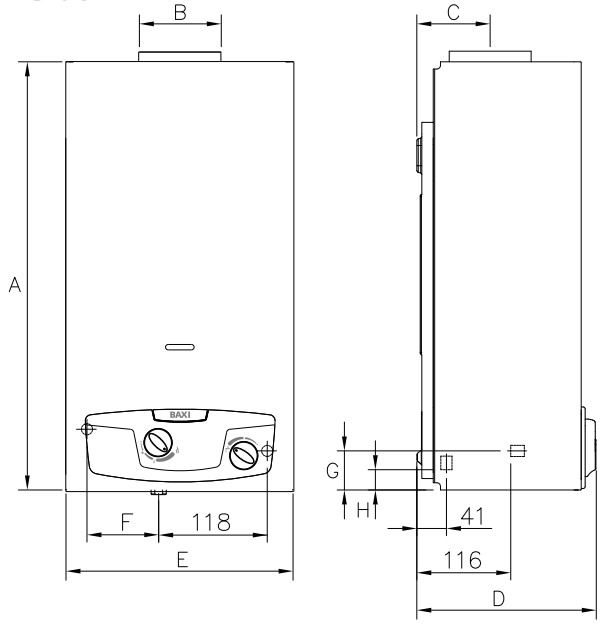

MODEL		11i	14i
A	mm	592	650
B (Ø)	mm	110	130
C	mm	101	101
D	mm	247	248
E	mm	314	363
F	mm	97	117
G	mm	54	74
H	mm	25	45

Acquaprojet Blue
11Fi Blue, 14Fi Blue, 17Fi Blue

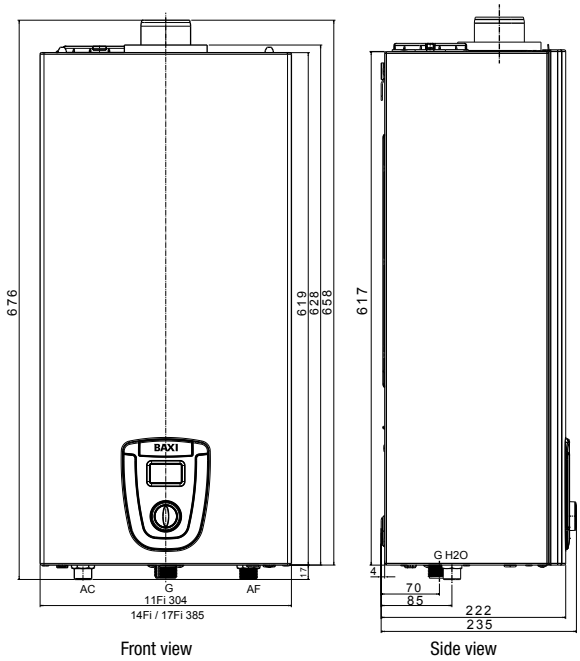

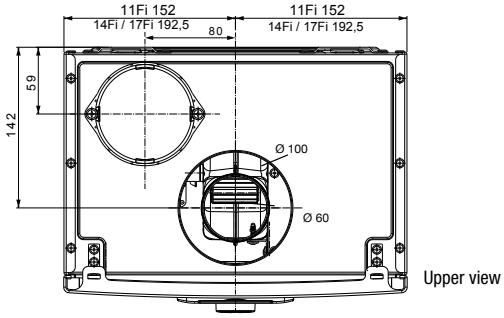

Hydraulic connections (mm)

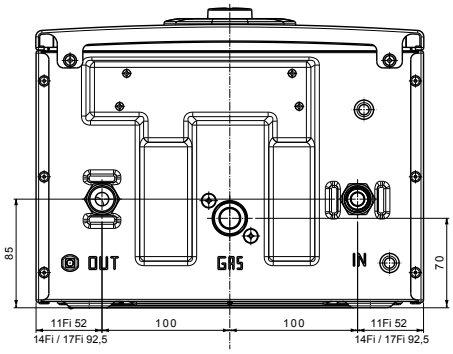

Coaxial flue

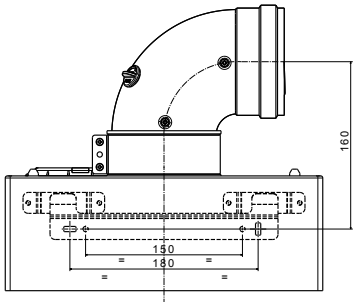

L1 = INTAKE PIPE
L2 = FLUE PIPE

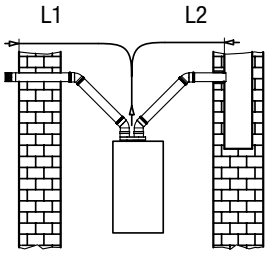

L1, L2 Ø80

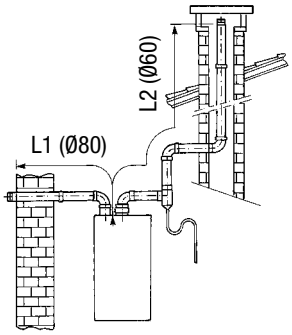

L1 Ø80, L2 Ø60

Dual flue

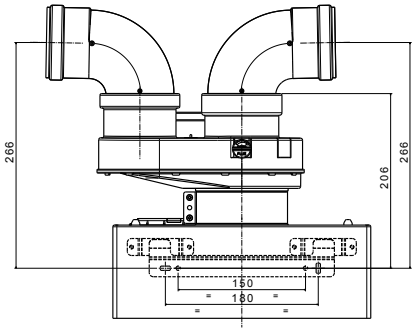

Flue pipe dimensions (mm)

Acquaprojet Blue 11Fi Blue L max (m)		Acquaprojet Blue 14Fi Blue L max (m)		Acquaprojet Blue 17Fi Blue L max (m)	
Ø60/100 mm horizontal, coaxial	Ø60/100 mm vertical, coaxial	Ø60/100 mm horizontal, coaxial	Ø60/100 mm vertical, coaxial	Ø60/100 mm horizontal, coaxial	Ø60/100 mm vertical, coaxial
5,7	6,7	3,7	4,7	3,2	4,2

Length reduction for a 90° bend insertion (m) Ø60/100 mm coaxial	Length reduction for a 45° bend insertion (m) Ø60/100 mm coaxial
1,4	1

RIGID FLUE PIPE						
Models	L max=L1+L2 (m)					
	Intake pipe (L1) Ø80, flue pipe (L2) Ø80			Intake pipe (L1) Ø80, flue pipe (L2) Ø60		
	L max= L1+L2	L1 max	L2 max = Lmax-L1 max	L max= L1+L2	L1 max	L2 max = Lmax-L1 max
Acquaprojet Blue 11Fi	42	21	21	10	1	9
Acquaprojet Blue 14Fi	34	17	17	6	1	5
Acquaprojet Blue 17Fi	18	9	9	-	-	-

RIGID FLUE PIPE				
Models	Ø80 mm		Ø60 mm	
	Length reduction for a 90° bend insertion (m)	Length reduction for a 45° bend insertion (m)	Length reduction for a 90° bend insertion (m)	Length reduction for a 90° bend insertion (m)
Acquaprojet Blue 11Fi/14Fi/17Fi	1,8	1,3	3	1,5

Gas instantaneous water heaters

Acquaprojet Blue Air
11Fi Blue Air, 14i Blue Air

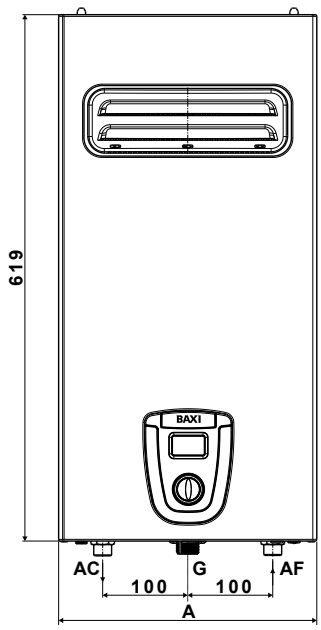

Front view

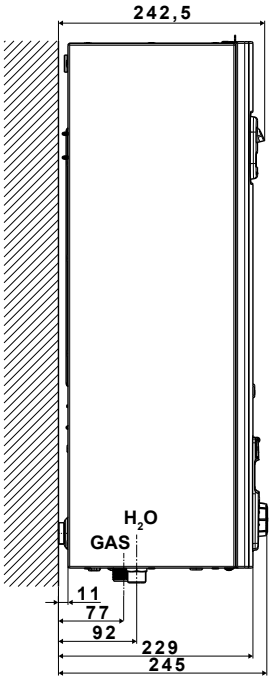

Side view

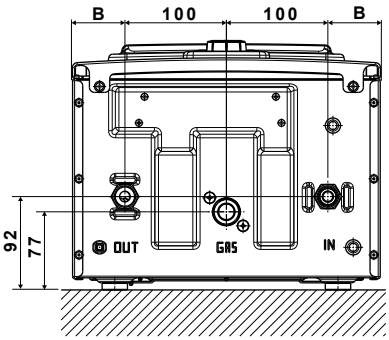

Upper view

Legend	
A	304 mm (11Fi) - 365 mm (14 Fi)
B	52 mm (11Fi) - 92,5 mm (14 Fi)
AC	DHW outlet 1/2 M
G	Gas inlet 3/4 M
AF	Cold water inlet 1/2 M

Acquaprojet Blue Air
17Fi Blue Air

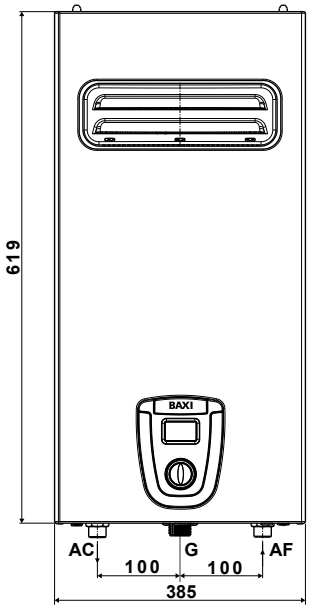

Front view

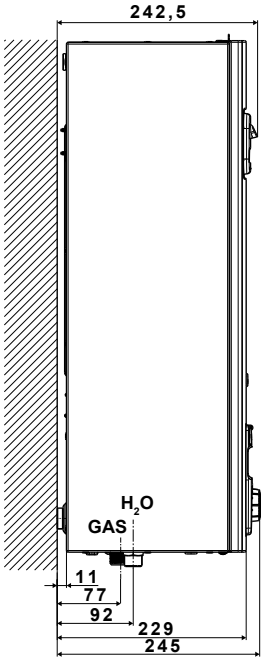

Side view

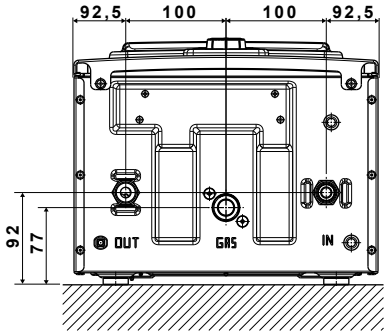

Upper view

Legend	
AC	DHW outlet 1/2 M
G	Gas inlet 3/4 M
AF	Cold water inlet 1/2 M

Dimensions (mm)

Floor standing heat pump water heaters

SPC 200 - SPC 300

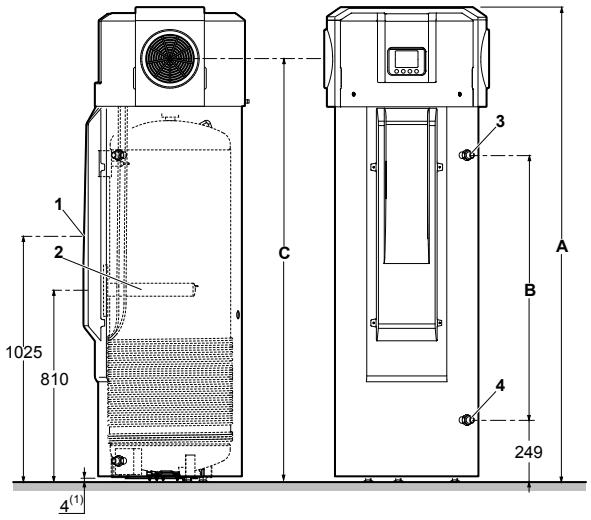

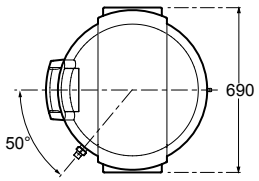

A 1690 mm (SPC 200) - 2000 mm (SPC 300)
B 820 mm (SPC 200) - 1133 mm (SPC 300)
C 1475 mm (SPC 200) - 1785 mm (SPC 300)
1 Forced electric pulse anode
2 Satellite electric water heater 1,8 kW
3 DHW outlet G 3/4"
4 DHW inlet G 3/4"
(1) Adjustable feet

SPC 300 S

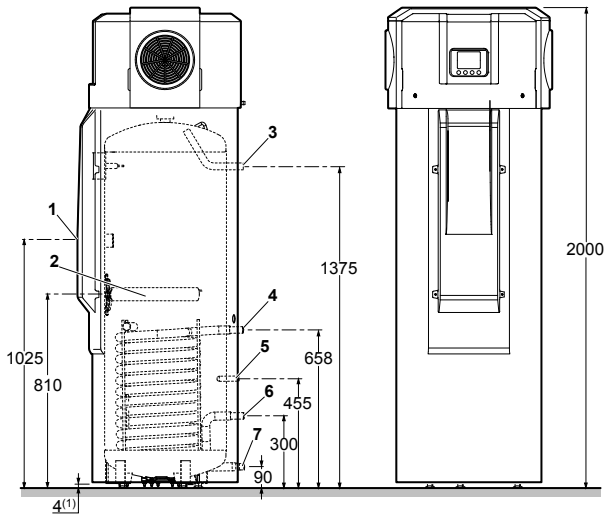

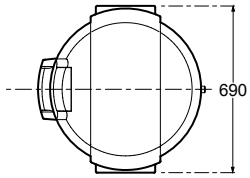

1 Forced electric pulse anode
2 Satellite electric water heater 1,8 kW
3 Secondary DHW flow G 3/4"
4 Solar exchanger or boiler inlet G 3/4"
5 Probe holder cockpit for solar probe or boiler
6 Solar exchanger or boiler outlet G 3/4"
7 DHW inlet G 3/4"
(1) Adjustable feet

Dimensions (mm)

Wall hung heat pump water heaters

SPC 90

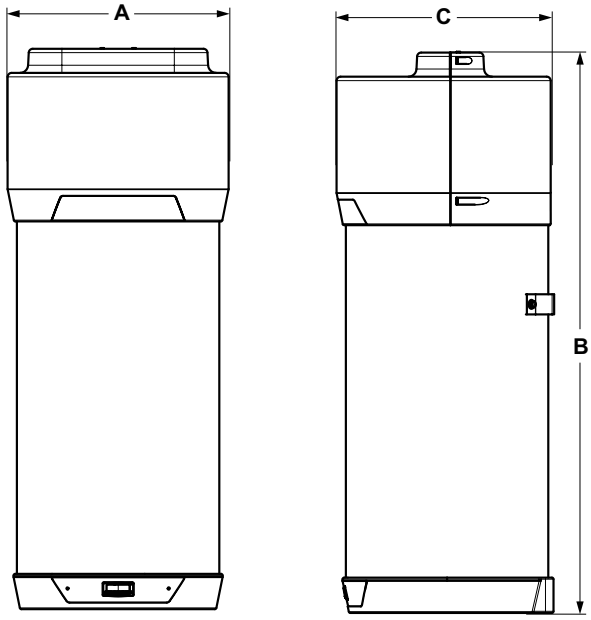

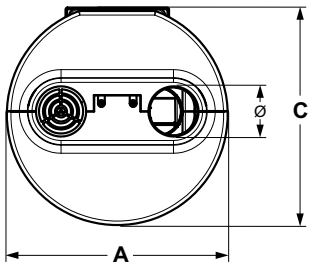

A	mm	550
B	mm	1392
C	mm	542
Ø	mm	125

Split heat pump water heaters

SPC SPLIT

SPC Split 150 WH (wall hung) indoor unit

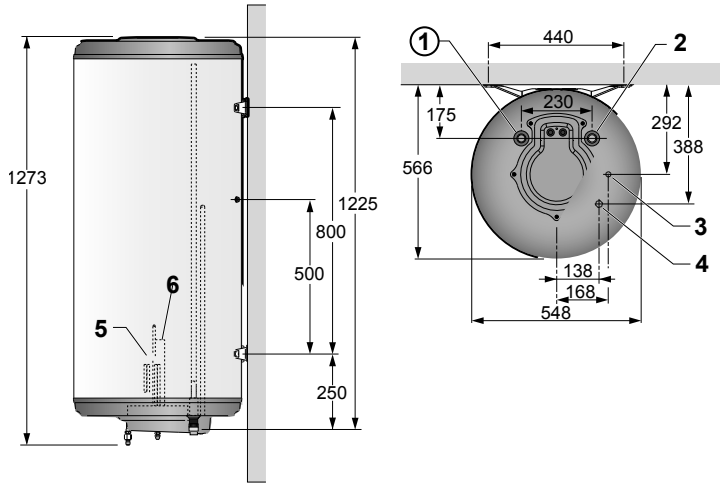

Legend

1 DHW outlet G 3/4" (with/without dielectric connection)
2 DHW inlet G 3/4" (without dielectric connection)
3-4 Refrigerant liquid and gas connections 3/8" and 1/4"
5 Magnesium anode
6 Electrical resistance 1600 W

SPC Split 200/300 FS (floor standing) indoor unit

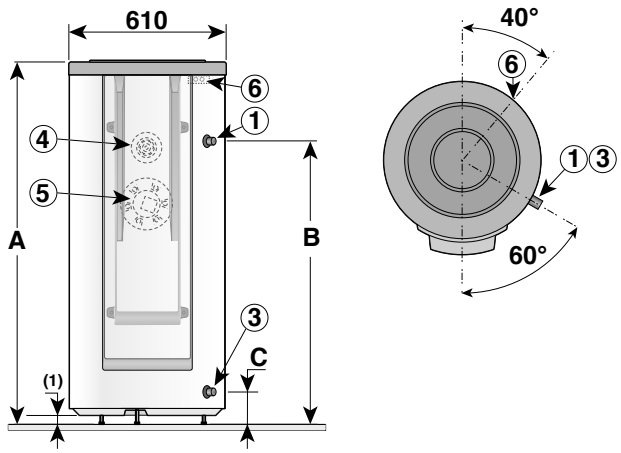

Legend

1 DHW outlet G 3/4" (with/without dielectric connection)
3 DHW inlet G 3/4" (without dielectric connection)
4 Magnesium anode
5 Electrical resistance 1800 W
6 Refrigerant liquid and gas connections 3/8" and 1/4"
(1) Adjustable feet from 10 to 21 mm

SPC Split		200 FS	300 FS
A	mm	1377	1690
B	mm	1065	1378
C	mm	92	92

Outdoor unit

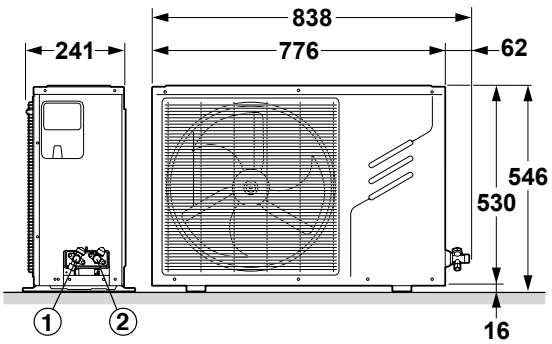

Legend

1 Refrigerant liquid connections 1/4"
2 Refrigerant liquid connections 3/8"

Air conditioning

Baxi Astra - Mono Split R32

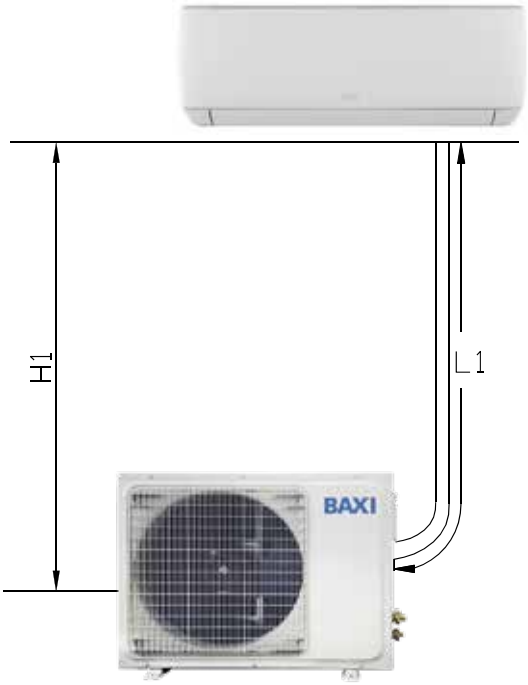

	9.000 Btu/h	12.000 Btu/h	18.000 Btu/h	24.000 Btu/h
L1 (m)	20	20	25	25
H1 (m)	10	10	15	15
Pre-charged refrigerant (kg//m)	0,58//7	0,68//7	1,28//7	1,44//7
Additional charge (g/m)	15	15	25	30

	9.000 Btu/h	12.000 Btu/h	18.000 Btu/h	24.000 Btu/h
Power supply	from outdoor unit, cable supplied, 230V/50Hz, 2 wires +T			
Supply wires number and section (mm^2)	2 x 1,5+T	2 x 1,5+T	2 x 2,5+T	2 x 2,5+T
Communication wires number and section (mm^2)	4 x 1,5+T	4 x 1,5+T	4 x 2,5+T	4 x 2,5+T

Connections	Liquid	Gas
9.000 Btu/h	G 1/4"	G 3/8"
12.000 Btu/h	G 1/4"	G 3/8"
18.000 Btu/h	G 1/4"	G 1/2"
24.000 Btu/h	G 1/4"	G 5/8"

Air conditioning

Baxi Astra - Multi Split R32

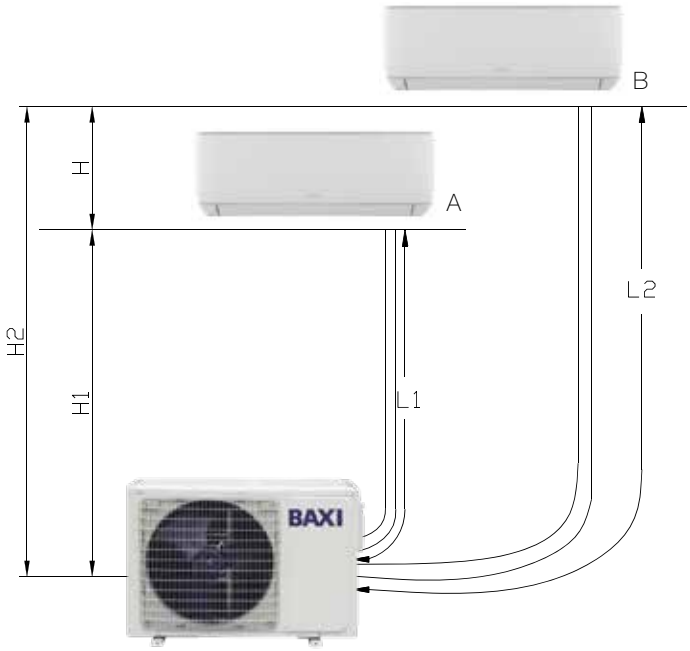

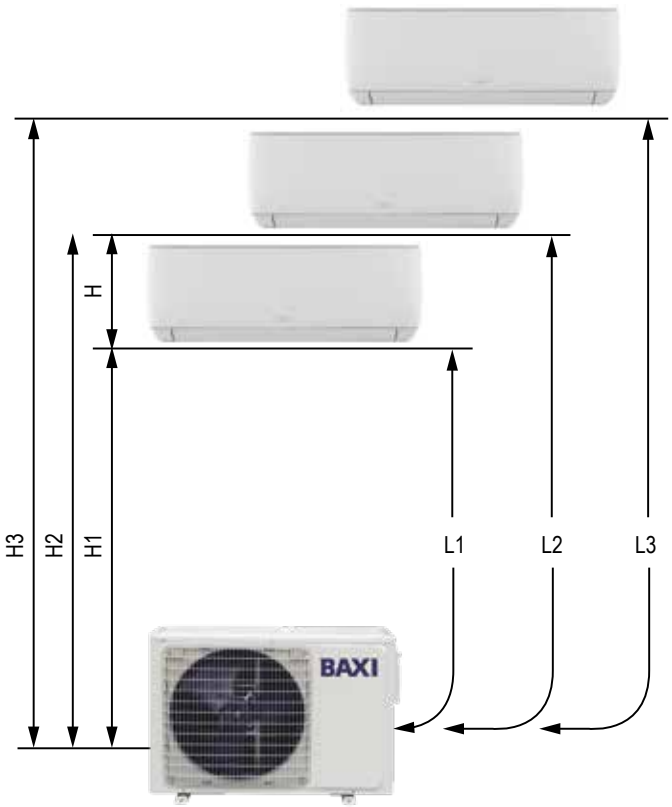

	2x1 (14.000 Btu/h)	2x1 (18.000 Btu/h)
L1+L2+L3+L4+L5 (m)	40	40
L1, L2, L3, L4, L5 (m)	25	25
H1, H2, H3, H4, H5 (m)	15	15
H (m)	10	10
Pre-charged refrigerant (kg//m)	1,07//15	1,10//15
Additional charge (g/m)	20	20

	3x1 (21.000 Btu/h)	3x1 (27.000 Btu/h)
L1+L2+L3+L4+L5 (m)	60	60
L1, L2, L3, L4, L5 (m)	30	30
H1, H2, H3, H4, H5 (m)	15	15
H (m)	10	10
Pre-charged refrigerant (kg//m)	1,25//22,5	1,2//22,5
Additional charge (g/m)	20	20

	4x1 (36.000 Btu/h)	5x1 (42.000 Btu/h)
L1+L2+L3+L4+L5 (m)	80	80
L1, L2, L3, L4, L5 (m)	35	35
H1, H2, H3, H4, H5 (m)	15	15
H (m)	10	10
Pre-charged refrigerant (kg//m)	2,3//30	2,3//37,5
Additional charge (g/m)	20	20

	2x1 (14.000 Btu/h)	2x1 (18.000 Btu/h)
Power supply (V~, Hz, Ph)	220~240, 50,1	220~240, 50,1
Supply wires number and section (mm²)	2 x 2,5+T	2 x 2,5+T
Communication wires number and section (mm²)	3 x 1,5+T	3 x 1,5+T

	3x1 (21.000 Btu/h)	3x1 (27.000 Btu/h)
Power supply (V~, Hz, Ph)	220~240, 50,1	220~240, 50,1
Supply wires number and section (mm²)	2 x 2,5+T	2 x 4,0+T
Communication wires number and section (mm²)	3 x 1,5+T	3 x 1,5+T

	4x1 (36.000 Btu/h)	5x1 (42.000 Btu/h)
Power supply (V~, Hz, Ph)	220~240, 50,1	220~240, 50,1
Supply wires number and section (mm²)	2 x 4,0+T	2 x 4,0+T
Communication wires number and section (mm²)	3 x 1,5+T	3 x 1,5+T

Connections		
Indoor unit	Liquid	Gas
7.000 Btu/h	1/4" / 6,35	3/8" / 9,52
9.000 Btu/h	1/4" / 6,35	3/8" / 9,52
12.000 Btu/h	1/4" / 6,35	3/8" / 9,52
18.000 Btu/h	1/4" / 6,35	1/2" / 12,7
Outdoor unit	Liquid	Gas
2x1 (14.000 Btu/h)	2 x 6,35 (1/4")	2 x 9,52 (3/8")
2x1 (18.000 Btu/h)	2 x 6,35 (1/4")	2 x 9,52 (3/8")
3x1 (21.000 Btu/h)	3 x 6,35 (1/4")	3 x 9,52 (3/8")
3x1 (27.000 Btu/h)	3 x 6,35 (1/4")	3 x 9,52 (3/8")
4x1 (36.000 Btu/h)	4 x 6,35 (1/4")	4 x 9,52 (3/8")
5x1 (42.000 Btu/h)	5 x 6,35 (1/4")	5 x 9,52 (3/8")

Notes

BAXISPA

36061 BASSANO DEL GRAPPA (VI)
Via Trozzetti, 20
marketing@baxi.it
www.baxi.it

Baxi S.p.A. 10-20 (E)

@baxiworld